EVO*line*

The new axial rolling head

The beginning of a new generation

The new axial rolling head generation EVOline – Success with system

New shank adaption for precise concentricity and safe torque transmission. High flexibility and efficiency due to modular change shanks.

Axial rolling head EVOline: Increased process safety and highest user friendliness.

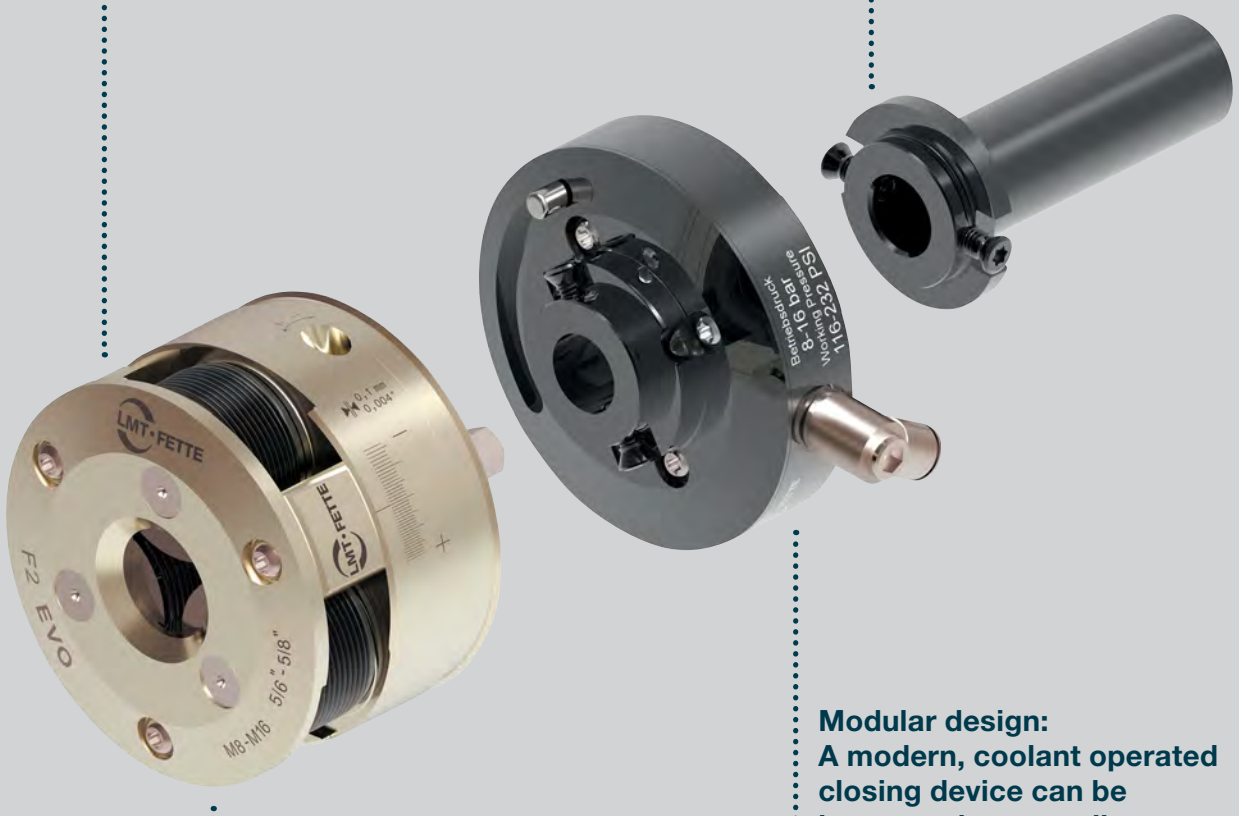

Modular design: A modern, coolant operated closing device can be integrated very easily.

Central adjustment of the rolling diameter with fine adjustment. Easy handling and precise repeatability of the settings.

Customer benefits

Short machining times, high thread strength and high thread quality

Easy and precise fine adjustment of the rolling diameter

Increased process safety due to chip guard

Safe and easy assembly due to modular design

NEW

Modern closing device is easy to adapt

Fine adjustment of the rolling diameter

- Central adjustment of the diameter range including fine adjustment of the rolling diameter – patent applied
- Fine adjustment by adjusting spindle
- Precise adjustment possible (in range of 0.01 mm)
- High repeatability – reproducibility of pitch diameter at same scale position is ± 0.01 mm

Chip guard

- Increased process safety due to new chip guard
- Protection from chips and other particles (from pre/ post processes) even at opened clutch

Modular design

- Consisting of: thread rolls, roller cage, rolling system housing incl. central fine adjustment, closing clip resp. closing device and shank with new adaption
- Closing clip revolving full 360° and can be set perfectly to the adaption situation in the machine
- Coolant driven closing device is available optional and can be integrated easily between clutch and shank
- High flexibility and efficiency due to interchangeable shanks

New shank adaption

- The ideal modular design – optional closing device can be integrated
- Precise concentricity
- Safe torque transmission
- Easy assembly
- High flexibility due to a wide range of standard shank sizes

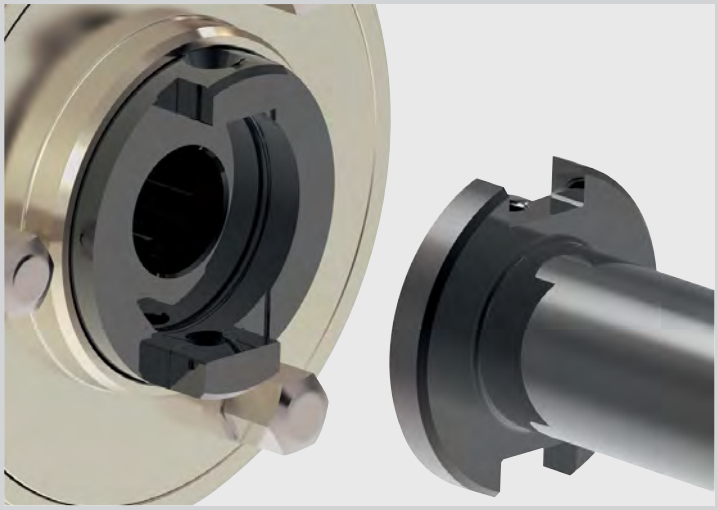

Easy assembly

- High process safety due to defined mounting position
- Additional marking on gears for error-free assembly
- Defined mounting position of the clutch due to different angle

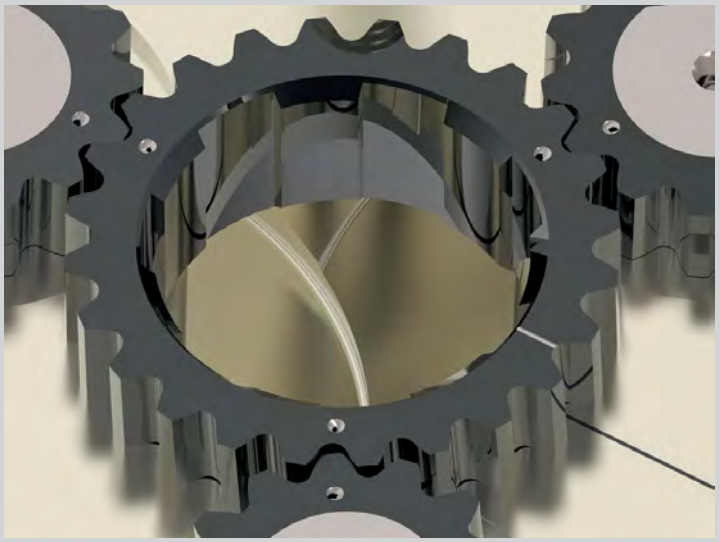

Closing clip

- Infinitely adjustable
- Adjustable range 360°
- Perfect set-up to suit machine tool requirements
- Interface for different fastening elements (closing roller, closing pin) available

Closing device EVOline – after rolling is before rolling

LMT Fette rolling heads generate the thread or required form and then open automatically after rolling. Before the next thread can be rolled the head has to be put back into working position, means the head must be closed.

The completely new designed closing clip, delivered as standard, already allows an flexible and user friendly layout of the process for closing the rolling head.

Another significant optimization of the closing process can be realized with the new closing device (CCD) for EVOline. Adapted between rolling head and shank and connected with the cool-ant supply, closing of the rolling head can be transferred from process time to the non-productive time of the machine.

Closing by coolant (or even compressed air) can be integrated in the machine program by a simple function. Easy, safe and fast.

- Because of the modular design of EVOline the closing device can be easily integrated between head and shank
- All shank variants still can be used

- The closing device can be operated with any coolant and also with compressed air
- The working pressure is at range from 8 – 16 bar

- Delivered in standard is a complete starter package: beside the closing device there is a special chip guard, different connecting elements and a pressure hose

- High process safety and easy assembly due to defined mount-ing position and one-to-one marking at chip guard

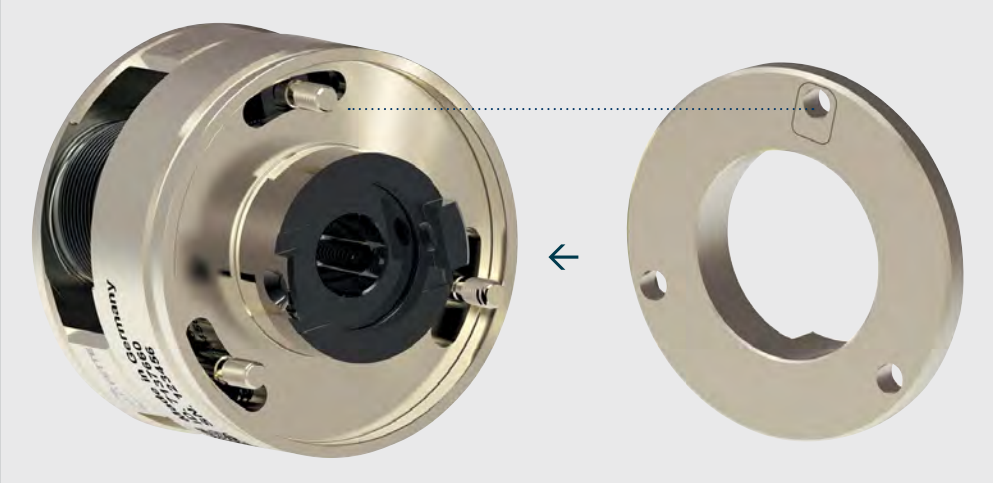

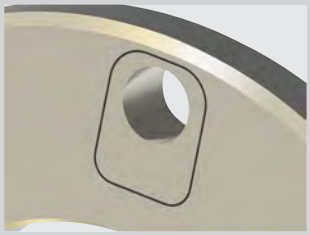

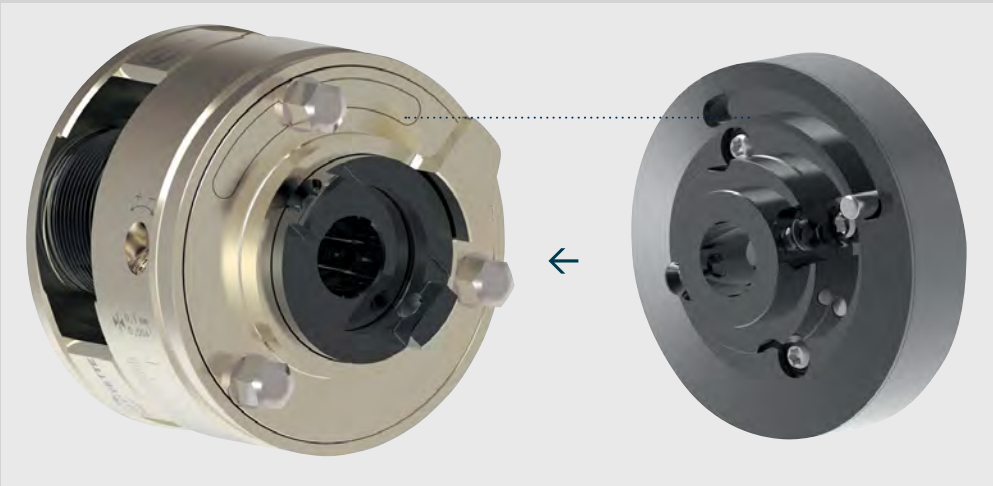

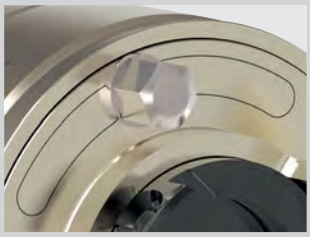

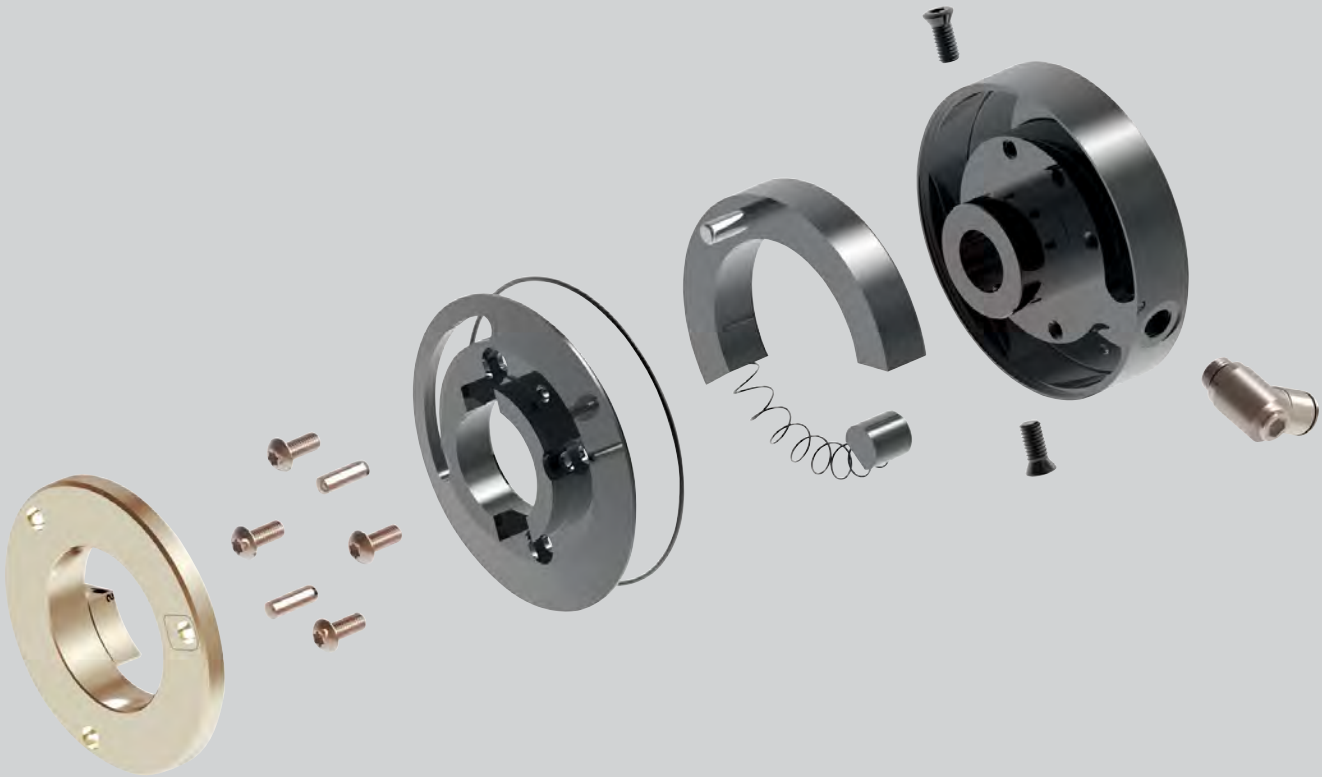

Axial type rolling head **F1 EVO, K1 EVO**

Type	Ident No.
F1 EVO	7146300
F1L EVO	7169593
K1 EVO	7169594
K1L EVO	7169595

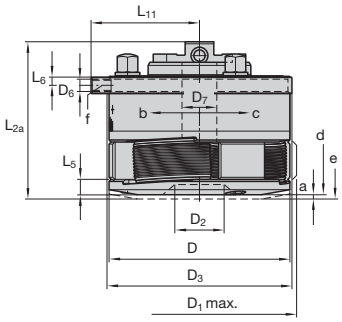

Dimension in mm / inches

D	D_{1max}	D_2	D_3	D_6	D_7	L_{2a}	L_5	L_6	L_{11}	a	α	γ		
64	70	17	66	M 5	11,4	61	6	3,5	38,3	2	60°	3° 30'		
2.520"	2.756"	0.669"	2.598"		0.449"	2.402"	0.236"	0.138"	1.508"	0.079"				

m-Rk	m-Ro
appr. 0,9 kg	0,105–0,155 kg
appr. 1.98 lb	0.23–0.34 lb

F1 EVO, K1 EVO for right-hand threads
F1L EVO, K1L EVO for left-hand threads
F1 EVO, F1L EVO to be used stationary only
K1 EVO, K1L EVO used stationary or rotating

a = Pull off for opening
b = Head closes when type F
c = Head opens when type F
d = Rolling head closed
e = Rolling head opened
f = Thread for hand grip with stationary operation
α = Closing angle
γ = Inclined position of rolls
m-Rk = Rolling head weight without shank and rolls
m-Ro = Weight of 1 set of 3 rolls

Change shanks **EVOline**

Type	Ident No.
R20-size 1	7139594
R25-size 1	7139596
R 3/4-size 1	7139598
R1-size 1	7139600
R1 1/4-size 1	7139602
VDI-20-size 1	7139604
VDI-25-size 1	7139606
VDI-30-size 1	7139608
HSK-A63-size 1	7139610

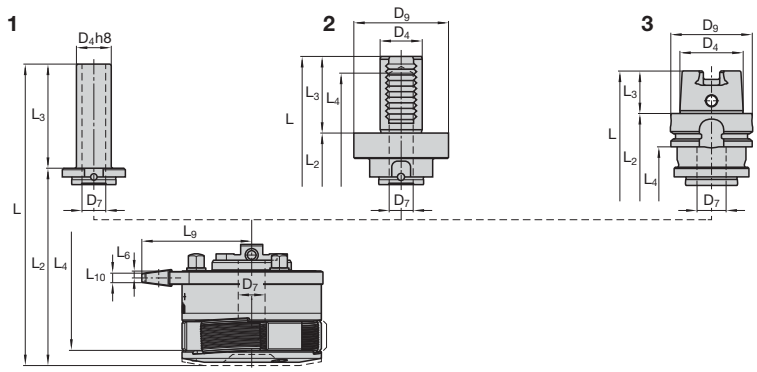

Shank Ø	Dimension in mm / inches								
	D_4	D_7	D_9	D_{KSE}	L	L_a	L_2	L_{2b}	L_3
20	20 I 0.787"	11,4 I 0.449"	–	73 I 2.874"	121 I 4.764"	152 I 5.984"	61 I 2.402"	92 I 3.622"	60 I 2.362"
25	25 I 0.984"	11,4 I 0.449"	–	73 I 2.874"	121 I 4.764"	152 I 5.984"	61 I 2.402"	92 I 3.622"	60 I 2.362"
3/4	19,05 I 0.750"	11,4 I 0.449"	–	73 I 2.874"	121 I 4.764"	152 I 5.984"	61 I 2.402"	92 I 3.622"	60 I 2.362"
1	25,4 I 1.000"	11,4 I 0.449"	–	73 I 2.874"	121 I 4.764"	152 I 5.984"	61 I 2.402"	92 I 3.622"	60 I 2.362"
1 1/4	31,75 I 1.250"	11,4 I 0.449"	–	73 I 2.874"	121 I 4.764"	152 I 5.984"	61 I 2.402"	92 I 3.622"	60 I 2.362"
VDI-20	20 I 0.787"	11,4 I 0.449"	50 I 1.969"	73 I 2.874"	125 I 4.921"	156 I 6.142"	85 I 3.347"	116 I 4.567"	40 I 1.575"
VDI-25	25 I 0.984"	11,4 I 0.449"	58 I 2.283"	73 I 2.874"	133 I 5.236"	164 I 6.457"	85 I 3.347"	116 I 4.567"	48 I 1.890"
VDI-30	30 I 1.181"	11,4 I 0.449"	68 I 2.677"	73 I 2.874"	140,5 I 5.532"	171,5 I 6.752"	85,5 I 3.366"	116,5 I 4.587"	55 I 2.165"
HSK-A63	48 I 1.890"	11,4 I 0.449"	63 I 2.480"	73 I 2.874"	132 I 5.197"	163 I 6.417"	100 I 3.937"	131 I 5.158"	32 I 1.260"

Change shanks will be delivered with the according fastening screws (2 x 1044990).

Coolant operating closing device			CCD Size 1
Part No.	Qty.	Part description	Ident No.
1	1	Housing	7154981
2	1	Cover plate	7154982
3	1	Curved piston	7154983
4	1	Spring bolt	7154978
5	1	Chip guard	7154975
6	1	Ring sealing	7154976
7	1	Pressure spring	7154977
8	1	Cylindrical pin	2142677
9	1	Cylindrical pin	2143287
10	4	Screw	7123889
11	1	L- and I-Fitting G1/8"	7167804-L 7167806-I
12	2	Screw	1044990

Type	Ident No.
CCD EVOline Size 1	7154980

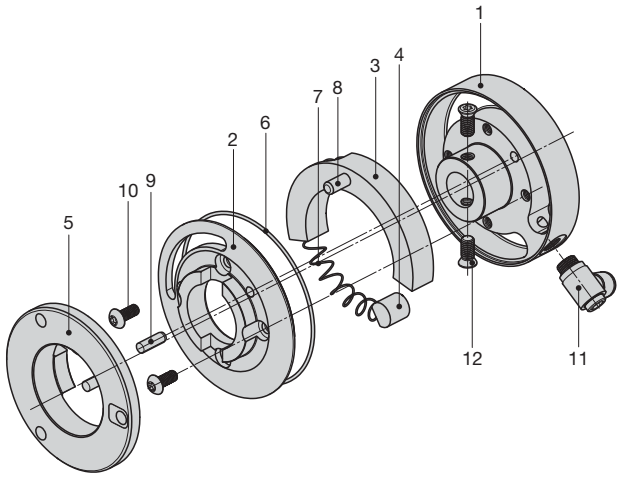

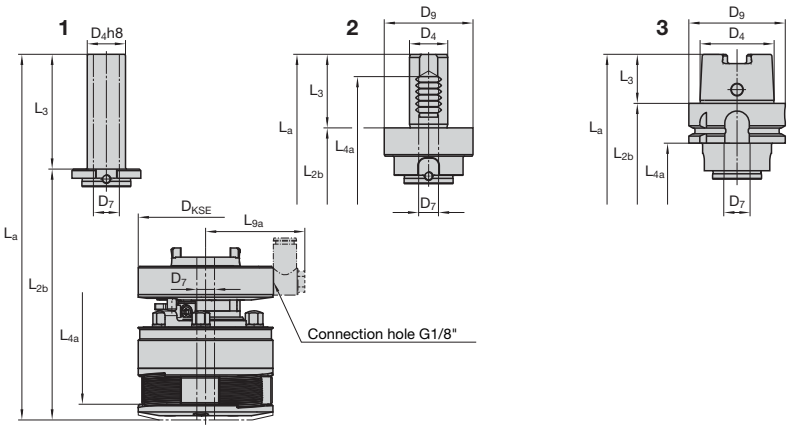

1 Straight shank

2 VDI shank

3 HSK shank

Others (upon request)

	L_4	L_{4a}	L_6	L_9	L_{9a}	L_{10}	m-Rs
	–	–	3,5 I 0.138 "	52,8 I 2.079 "	Individual	5 I 0.197 "	appr. 0,13 kg appr. 0.29 lb
	–	–	3,5 I 0.138 "	52,8 I 2.079 "	Individual	5 I 0.197 "	appr. 0,21 kg appr. 0.46 lb
	–	–	3,5 I 0.138 "	52,8 I 2.079 "	Individual	5 I 0.197 "	appr. 0,12 kg appr. 0.27 lb
	–	–	3,5 I 0.138 "	52,8 I 2.079 "	Individual	5 I 0.197 "	appr. 0,22 kg appr. 0.49 lb
	–	–	3,5 I 0.138 "	52,8 I 2.079 "	Individual	5 I 0.197 "	appr. 0,35 kg appr. 0.77 lb
	78,5 I 3.091 "	109,5 I 4.311 "	3,5 I 0.138 "	52,8 I 2.079 "	Individual	5 I 0.197 "	appr. 0,41 kg appr. 0.90 lb
	113,5 I 4.469 "	144,5 I 5.689 "	3,5 I 0.138 "	52,8 I 2.079 "	Individual	5 I 0.197 "	appr. 0,57 kg appr. 1.26 lb
	120,5 I 4.744 "	151,5 I 5.965 "	3,5 I 0.138 "	52,8 I 2.079 "	Individual	5 I 0.197 "	appr. 0,82 kg appr. 1.81 lb
	66 I 2.598 "	97 I 3.819 "	3,5 I 0.138 "	52,8 I 2.079 "	Individual	5 I 0.197 "	appr. 0,76 kg appr. 1.68 lb

m-Rs = Weight shank

RH

LH

Nominal size x pitch mm	Lead 1k	Lead 2k
	Ident No.	
M 6 … 8 x 1	1504564	1504573
M 8 … 9 x 1,25	1504653	1504671
M 10 x 1,5	1504715	1504724

Nominal size x pitch mm	Lead 1k	Lead 2k
	Ident No.	
MF 6 … 8 x 0,75	7180387	7180385
MF 8 … 10 x 1	1504813	1504822
MF 10 … 11 x 1,25	1505000	1505019

Nominal size x TPI	Lead 1k	Lead 2k
	Ident No.	
UNC 1/4 – 20	1505545	1505554
UNC 5/16 – 18	1505563	1505572
UNC 3/8 – 16	1505581	1505590
UNC 7/16 1) – 14	2166949	2166784

Nominal size x TPI	Lead 1k	Lead 2k
	Ident No.	
UNF 1/4 – 28	1505625	1505634
UNF 5/16… 3/8 – 24	7180380	7180381
UNF 7/16 1) – 20	2241471	2169909

Nominal size x TPI	Lead 1k	Lead 2k
	Ident No.	
BSF 1/4 – 26	1505304	1505313
BSF 5/16 – 22	1505322	1505331
BSF 3/8 – 20	1505359	1505368
BSF 7/16 1) – 20	2241469	2241470

1) For short threads up to 14 mm I 0.551" including runout.

Nominal size x pitch mm I inch	RAA	RGE
	Ident No.	
Ø 6 … Ø 8 x 0,5 I Ø 0.236 … Ø 0.315 x 0.02	1505901	1506205
Ø 8 … Ø 10 x 0,5 I Ø 0.315 … Ø 0.394 x 0.02	2168750	1506214
Ø 6 … Ø 8 x 0,6 I Ø 0.236 … Ø 0.315 x 0.024	1505910	1506223
Ø 8 … Ø 10 x 0,6 I Ø 0.315 … Ø 0.394 x 0.024	1505929	1506232
Ø 6 … Ø 8 x 0,8 I Ø 0.236 … Ø 0.315 x 0.031	1505947	1506241
Ø 8 … Ø 10 x 0,8 I Ø 0.315 … Ø 0.394 x 0.031	1505956	1506250
Ø 6 … Ø 8 x 1,0 I Ø 0.236 … Ø 0.315 x 0.039	1505965	1506269
Ø 8 … Ø 10 x 1,0 I Ø 0.315 … Ø 0.394 x 0.039	1505983	1506278
Ø 6 … Ø 8 x 1,2 I Ø 0.236 … Ø 0.315 x 0.047	1505992	1506287
Ø 8 … Ø 10 x 1,2 I Ø 0.315 … Ø 0.394 x 0.047	1506009	1506296
Ø 6 … Ø 8 x 1,5 I Ø 0.236 … Ø 0.315 x 0.059	1506027	1506312
Ø 8 … Ø 10 x 1,5 I Ø 0.315 … Ø 0.394 x 0.059	1506036	1506321
Ø 7 … Ø 8 x 1,6 I Ø 0.276 … Ø 0.315 x 0.063	2242104	2242108
Ø 8 … Ø 10 x 1,6 I Ø 0.315 … Ø 0.394 x 0.063	2242105	2242109
Ø 7 … Ø 8 x 2,0 I Ø 0.276 … Ø 0.315 x 0.079	2242106	2242110
Ø 8 … Ø 10 x 2,0 I Ø 0.315 … Ø 0.394 x 0.079	2242107	2242111

Nominal size mm I inch	Ident No.
Ø 6 – Ø 8 I Ø 0.236 – Ø 0.315	1506330
Ø 7 – Ø 10 I Ø 0.276 – Ø 0.394	1506349

Nominal size x TPI	Lead 1k	Lead 2k
	Ident No.	
BSW 1/4 – 20	1505215	1505224
BSW 5/16 – 18	1505233	1505242
BSW 3/8 – 16	1505279	1505288

Nominal size x TPI	Lead 1k
	Ident No.
NPT 1/16 – 27	1506964
NPT 1/8 – 27	1506973

Nominal size x TPI	Lead 1k
	Ident No.
NPTF 1/16 – 27	2248946
NPTF 1/8 – 27	2245597

Thread dimensions combined in one block can be rolled with **one** set of rolls.

Rolling head			F1 EVO	Rolling head			F1 EVO
Part No.	Qty.	Part description	Ident No.	Part No.	Qty.	Part description	Ident No.
1	1	Clutch	7146301	9-3	1	Threaded pin	7146299
2	1	Adjustment housing	7146302	9-4	1	Screw	1045105
3	1	Center plate	7146303	10	1	Coil spring	7146310
4	1	Front plate	7146304	11	1	Circlip	2164642
5	3	Eccentric spindle	2164637	12	1	Circlip DIN 471	7130049
6	3	Spacer stud	7146306	13	3	Carbide bushing	2164705
7	1	Center gear	7146307	14	3	Screw	7123889
8	3	Spur gear	7146309	15	3	Cover nut	2148397
9	1	Closing clip complete	7146296	16	3	Washer	2143364
9-1	1	Clip	7146297	17	1	Chip guard	7146305
9-2	1	Hand grip	7146298	18	3	Roll	individual

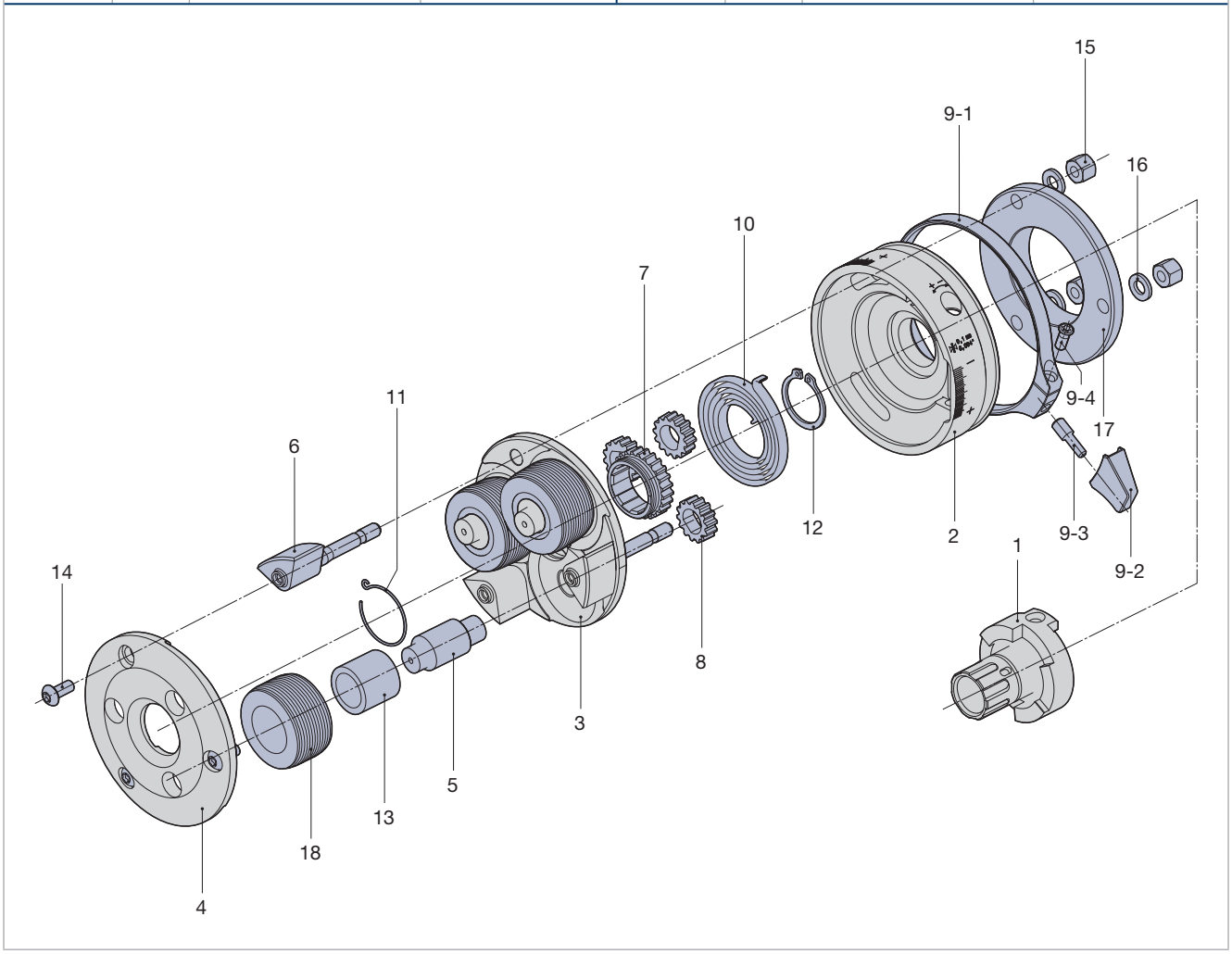

Axial type rolling head **F12 EVO, K12 EVO** NEW

Type	Ident No.
F12 EVO	7156343
F12L EVO	7169596
K12 EVO	7169597
K12L EVO	7169598

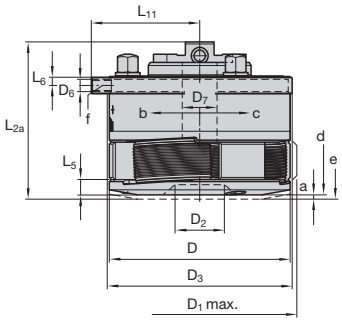

Dimension in mm / inches

D	D_{1max}	D_2	D_3	D_6	D_7	L_{2a}	L_5	L_6	L_{11}	a	α	γ
64	70	20	66	M 5	11,4	62,1	6	3,5	38,3	2	60°	1° 50'
2.520"	2.756"	0.787"	2.598"		0.449"	2.445"	0.236"	0.138"	1.508"	0.079"		

m-Rk	m-Ro
appr. 0,82 kg	0,07–0,13 kg
appr. 1.81 lb	0.15–0.29 lb

F12 EVO, K12 EVO for right-hand threads
F12L EVO, K12L EVO for left-hand threads
F12 EVO, F12L EVO to be used stationary only
K12 EVO, K12L EVO used stationary or rotating

a = Pull off for opening
b = Head closes when type F
c = Head opens when type F
d = Rolling head closed
e = Rolling head opened
f = Thread for hand grip with stationary operation
α = Closing angle
γ = nclined position of rolls
m-Rk = Rolling head weight without shank and rolls
m-Ro = Weight of 1 set of 3 rolls

Change shanks **EVOline**

Type	Ident No.
R20-size 1	7139594
R25-size 1	7139596
R 3/4-size 1	7139598
R1-size 1	7139600
R1 1/4-size 1	7139602
VDI-20-size 1	7139604
VDI-25-size 1	7139606
VDI-30-size 1	7139608
HSK-A63-size 1	7139610

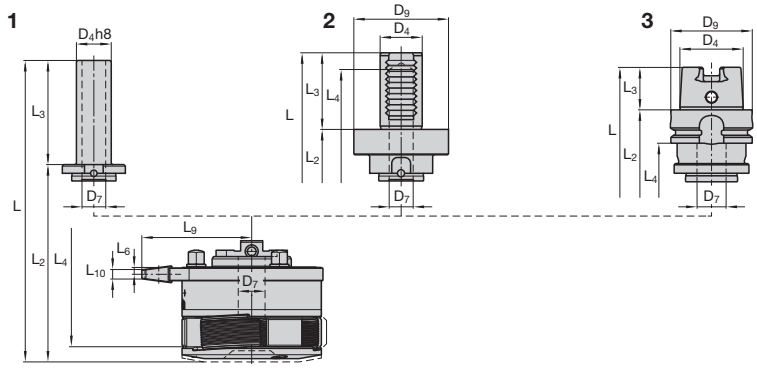

Shank Ø	Dimension in mm / inches								
	D_4	D_7	D_9	D_{KSE}	L	L_a	L_2	L_{2b}	L_3
20	20 I 0.787"	11,4 I 0.449"	–	73 I 2.874"	122,1 I 4.807"	153,1 I 6.028"	62,1 I 2.449"	93,1 I 3.665"	60 I 2.362"
25	25 I 0.984"	11,4 I 0.449"	–	73 I 2.874"	122,1 I 4.807"	153,1 I 6.028"	62,1 I 2.449"	93,1 I 3.665"	60 I 2.362"
3/4	19,05 I 0.750"	11,4 I 0.449"	–	73 I 2.874"	122,1 I 4.807"	153,1 I 6.028"	62,1 I 2.449"	93,1 I 3.665"	60 I 2.362"
1	25,4 I 1.000"	11,4 I 0.449"	–	73 I 2.874"	122,1 I 4.807"	153,1 I 6.028"	62,1 I 2.449"	93,1 I 3.665"	60 I 2.362"
1 1/4	31,75 I 1.250"	11,4 I 0.449"	–	73 I 2.874"	122,1 I 4.807"	153,1 I 6.028"	62,1 I 2.449"	93,1 I 3.665"	60 I 2.362"
VDI-20	20 I 0.787"	11,4 I 0.449"	50 I 1.969"	73 I 2.874"	126,1 I 4.965"	157,1 I 6.185"	86,1 I 3.390"	117,1 I 4.610"	40 I 1.575"
VDI-25	25 I 0.984"	11,4 I 0.449"	58 I 2.283"	73 I 2.874"	134,1 I 5.280"	165,1 I 6.500"	86,1 I 3.390"	117,1 I 4.610"	48 I 1.890"
VDI-30	30 I 1.181"	11,4 I 0.449"	68 I 2.677"	73 I 2.874"	141,6 I 5.575"	172,6 I 6.795"	86,6 I 3.410"	117,6 I 4.630"	55 I 2.165"
HSK-A63	48 I 1.890"	11,4 I 0.449"	63 I 2.480"	73 I 2.874"	133,1 I 5.240"	164,1 I 6.461"	101,1 I 3.980"	132,1 I 5.201"	32 I 1.260"

Change shanks will be delivered with the according fastening screws (2 x 1044990).

Coolant operating closing device			CCD Size 1
Part No.	Qty.	Part description	Ident No.
1	1	Housing	7154981
2	1	Cover plate	7154982
3	1	Curved piston	7154983
4	1	Spring bolt	7154978
5	1	Chip guard	7154975
6	1	Ring sealing	7154976
7	1	Pressure spring	7154977
8	1	Cylindrical pin	2142677
9	1	Cylindrical pin	2143287
10	4	Screw	7123889
11	1	L- and I-Fitting G1/8"	7167804-L 7167806-I
12	2	Screw	1044990

Type	Ident No.
CCD EVOline Size 1	7154980

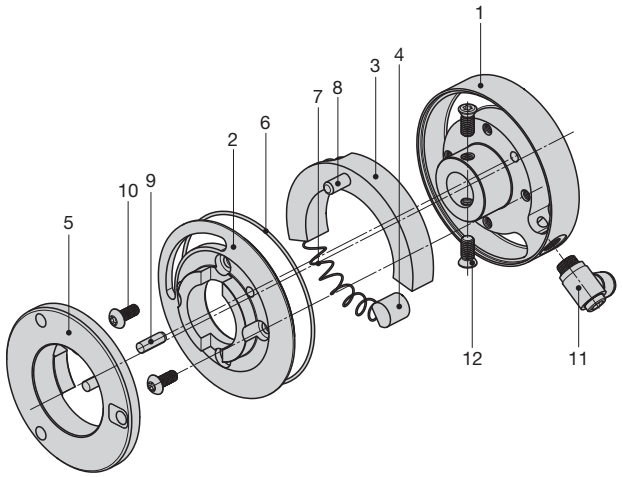

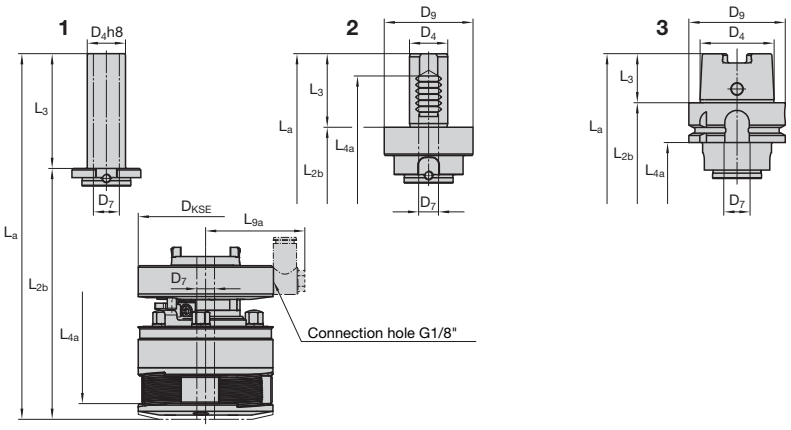

1 Straight shank

2 VDI shank

3 HSK shank

Others (upon request)

L_4	L_{4a}	L_6	L_9	L_{9a}	L_{10}	m-Rs
–	–	3,5 I 0.138 "	52,8 I 2.079 "	Individual	5 I 0.197 "	appr. 0,13 kg appr. 0.29 lb
–	–	3,5 I 0.138 "	52,8 I 2.079 "	Individual	5 I 0.197 "	appr. 0,21 kg appr. 0.46 lb
–	–	3,5 I 0.138 "	52,8 I 2.079 "	Individual	5 I 0.197 "	appr. 0,12 kg appr. 0.27 lb
–	–	3,5 I 0.138 "	52,8 I 2.079 "	Individual	5 I 0.197 "	appr. 0,22 kg appr. 0.49 lb
–	–	3,5 I 0.138 "	52,8 I 2.079 "	Individual	5 I 0.197 "	appr. 0,35 kg appr. 0.77 lb
79,6 I 3.134 "	110,6 I 4.354 "	3,5 I 0.138 "	52,8 I 2.079 "	Individual	5 I 0.197 "	appr. 0,41 kg appr. 0.90 lb
114,6 I 4.512 "	145,6 I 5.732 "	3,5 I 0.138 "	52,8 I 2.079 "	Individual	5 I 0.197 "	appr. 0,57 kg appr. 1.26 lb
121,6 I 4.787 "	152,6 I 6.008 "	3,5 I 0.138 "	52,8 I 2.079 "	Individual	5 I 0.197 "	appr. 0,82 kg appr. 1.81 lb
67,1 I 2.642 "	98,1 I 3.862 "	3,5 I 0.138 "	52,8 I 2.079 "	Individual	5 I 0.197 "	appr. 0,76 kg appr. 1.68 lb

m-Rs = Weight shank

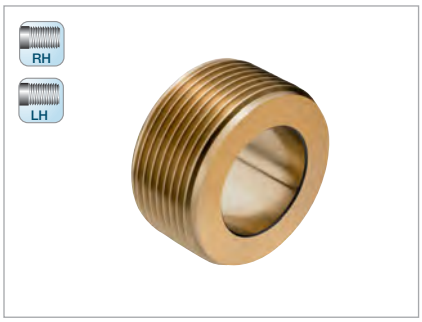

MF

Nominal size x pitch mm	Lead 1k	Lead 2k
	Ident No.	
MF 6 … 7 x 0,5	1507516	1507525
MF 7 … 8 x 0,5	1507534	1507543
MF 6 … 7 x 0,75	1507605	1507614
MF 8 … 9 x 0,75	1507632	1507641
MF 9 … 10 x 0,75	1507669	1507678
MF 10 … 11 x 0,75	1507703	1507712
MF 11 … 12 x 0,75	1507721	1507730
MF 8 … 9 x 1	1507767	1507776
MF 9 … 10 x 1	1507785	1507794
MF 10 … 11 x 1	1507838	1507847
MF 11 … 12 x 1[1)]	1507865	1507874
MF 10 … 11 x 1,25	1507892	1507909
MF 11 … 12 x 1,25[1)]	1507918	1507927
MF 12 x 1,5[1)]	1507963	1507972

UN UNF UNEF UNS

Nominal size x TPI	Lead 1k	Lead 2k
	Ident No.	
UNS 1/4 …5/16 – 40	2241721	2169907
UNF 5/16…3/8 – 36	2242136	2242137
UNF 7/16 – 36	2242138	2242139
UNEF 5/16…3/8 – 32	1508105	1508114
UN 3/8 …7/16 – 32	2242122	2242123
UNF 7/16…1/2[1)] – 32	2242140	2242141
UNF 3/8 …7/16 – 28	2242142	2242143
UNEF 7/16…1/2[1)] – 28	1508123	1508132
UNF 7/16…1/2[1)] – 26	2242144	2242145
UNS 3/8 …7/16 – 24	2167553	1508150
UNS 7/16…1/2[1)] – 24	1508203	2242147
UNF 7/16…1/2[1)] – 22	2242146	2242148
UNF 7/16…1/2[1)] – 20	1508178	1508187

G

Nominal size x TPI	Lead 1k	Lead 2k
	Ident No.	
G 1/8 – 28	1508052	1508061
G 1/4 – 19[1)]	1508089	1508098

BSFS

Nominal size x TPI	Lead 1k	Lead 2k
	Ident No.	
BSFS 1/4 …5/16 – 32	2242112	2242113
BSFS 5/16…3/8 – 26	2242114	2242115
BSFS 5/16…3/8 – 32	2242118	2242119
BSFS 7/16…1/2[1)] – 26	2242126	2242127
BSFS 7/16…1/2[1)] – 20	2242134	2242135

1) For short threads up to 14 mm/0.551" including runout.

NPT

Nominal size x TPI	Lead 1k
	Ident No.
NPT 1/8 – 27	2164716
NPT 1/4 – 18	2167396

NPTF

Nominal size x TPI	Lead 1k
	Ident No.
NPTF 1/8 – 27	2166823
NPTF 1/4 – 18	2243188

Thread dimensions combined in one block can be rolled with **one** set of rolls.

Rolling head			F12 EVO	Rolling head			F12 EVO
Part No.	Qty.	Part description	Ident No.	Part No.	Qty.	Part description	Ident No.
1	1	Clutch	7146301	9-4	1	Screw	1045105
2	1	Adjustment housing	7146302	10	1	Coil spring	7146310
3	1	Center plate	7156351	11	1	Circlip	2164642
4	1	Front plate	7156350	12	1	Circlip DIN 471	7130049
5	3	Eccentric spindle	2164737	13	3	Carbide bushing	2173512
6	3	Spacer stud	7156352	14	3	Screw	7123889
7	1	Center gear	7156356	15	3	Cover nut	2143535
8	3	Spur gear	7156354	16	3	Washer	2143364
9	1	Closing clip complete	7146296	17	1	Chip guard	7146305
9-1	1	Clip	7146297	18	3	Roll	individual
9-2	1	Hand grip	7146298	19	3	Washer	2164741
9-3	1	Threaded pin	7146299				

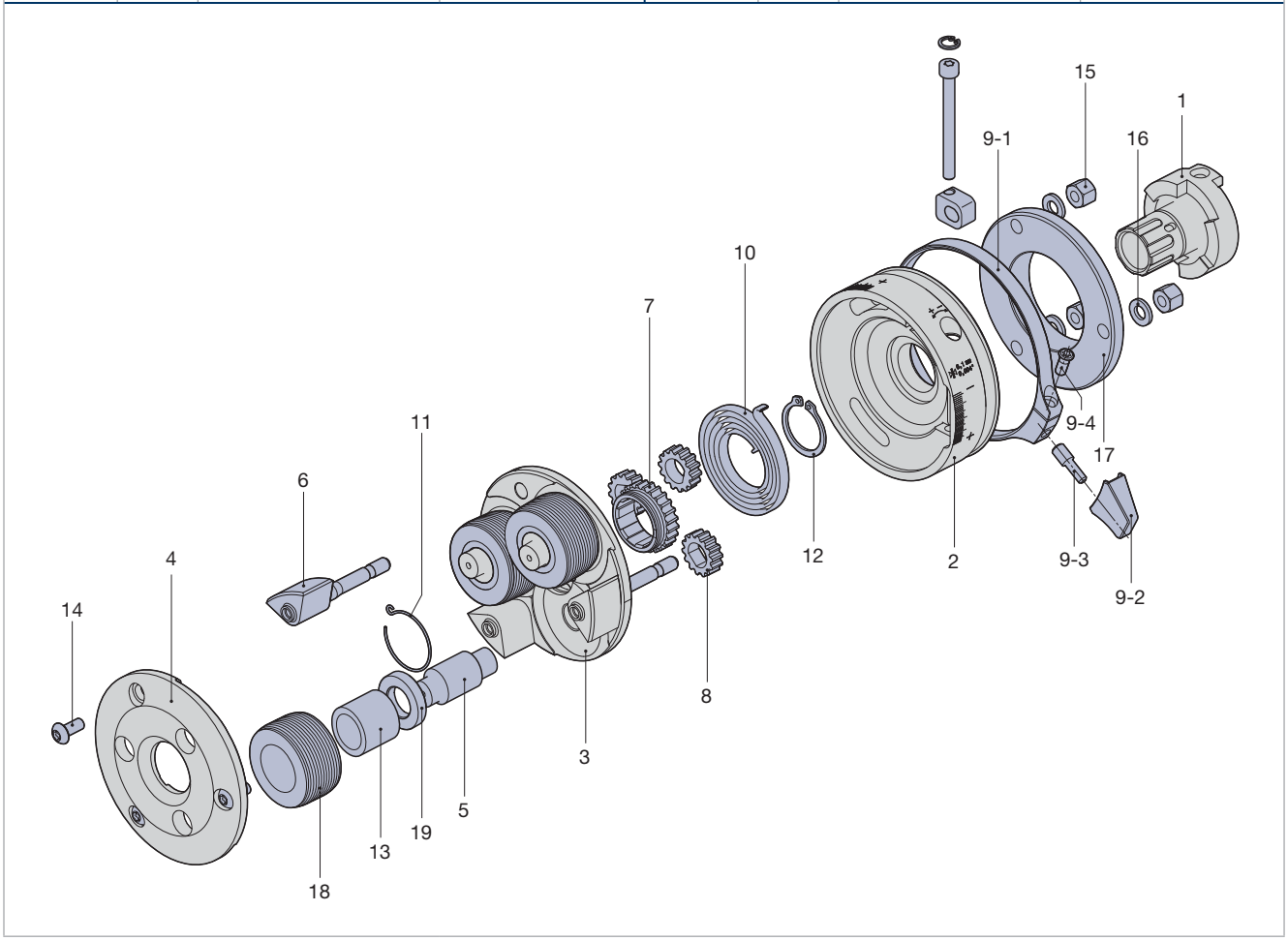

Type	Ident No.
F2 EVO	7137660
F2L EVO	7159830
K2 EVO	7159820
K2L EVO	7169599

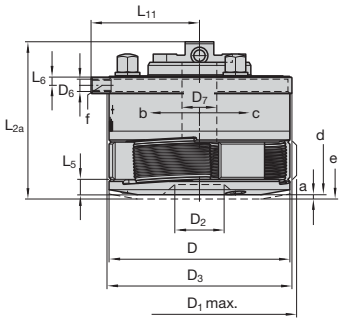

Dimension in mm / inches

D	D_{1max}	D_2	D_3	D_6	D_7	L_{2a}	L_5	L_6	L_{11}	a	α	γ		
88	93,5	24	90	M 6	17	77,5	7,5	4	52,8	3	60°	3°		
3.465"	3.681"	0.945"	3.543"		0.669"	3.051"	0.295"	0.158"	2.079"	0.118"				

m-Rk	m-Ro
appr. 1,8 kg	0,245–0,425 kg
appr. 3.96 lb	0.54–0.94 lb

F2 EVO, K2 EVO for right-hand threads
F2L EVO, K2L EVO for left-hand threads
F2 EVO, F2L EVO to be used stationary only
K2 EVO, K2L EVO used stationary or rotating

a = Pull off for opening
b = Head closes when type F
c = Head opens when type F
d = Rolling head closed
e = Rolling head opened
f = Thread for hand grip with stationary operation
α = Closing angle
γ = Inclined position of rolls
m-Rk = Rolling head weight without shank and rolls
m-Ro = Weight of 1 set of 3 rolls

Change shanks **EVOline**

Type	Ident No.
R25-size 2	7137673
R30-size 2	7139612
R1-size 2	7139614
R1 1/4-size 2	7139616
R1 1/2-size 2	7139618
VDI-25-size 2	7139620
VDI-30-size 2	7139622
VDI-40-size 2	7139624
HSK-A63-size 2	7139626

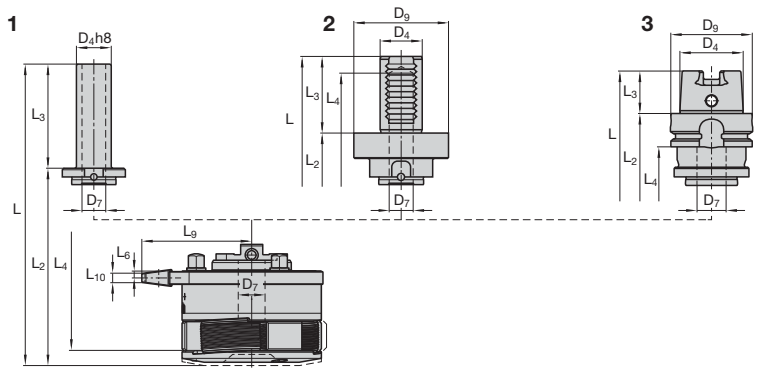

Shank Ø	Dimension in mm / inches								
	D_4	D_7	D_9	D_{KSE}	L	L_a	L_2	L_{2b}	L_3
25	25 I 0.984"	17 I 0.669"	–	88 I 3.465"	152,5 I 6.004"	187,8 I 7.394"	77,5 I 3.051"	112,8 I 4.441"	75 I 2.953"
30	30 I 1.181"	17 I 0.669"	–	88 I 3.465"	167,5 I 6.594"	202,8 I 7.984"	77,5 I 3.051"	112,8 I 4.441"	90 I 3.543"
1	25,4 I 1.000"	17 I 0.669"	–	88 I 3.465"	152,5 I 6.004"	187,8 I 7.394"	77,5 I 3.051"	112,8 I 4.441"	75 I 2.953"
1 1/4	31,75 I 1.250"	17 I 0.669"	–	88 I 3.465"	167,5 I 6.594"	202,8 I 7.984"	77,5 I 3.051"	112,8 I 4.441"	90 I 3.543"
1 1/2	38,1 I 1.500"	17 I 0.669"	–	88 I 3.465"	167,5 I 6.594"	202,8 I 7.984"	77,5 I 3.051"	112,8 I 4.441"	90 I 3.543"
VDI-25	25 I 0.984"	17 I 0.669"	58 I 2.283"	88 I 3.465"	150,5 I 5.925"	185,8 I 7.315"	102,5 I 4.035"	137,8 I 5.425"	48 I 1.890"
VDI-30	30 I 1.181"	17 I 0.669"	68 I 2.677"	88 I 3.465"	158 I 6.220"	193,3 I 7.610"	103 I 4.055"	138,3 I 5.445"	55 I 2.165"
VDI-40	40 I 1.575"	17 I 0.669"	83 I 3.268"	88 I 3.465"	166 I 6.535"	201,3 I 7.925"	103 I 4.055"	138,3 I 5.445"	63 I 2.480"
HSK-A63	48 I 1.890"	17 I 0.669"	63 I 2.480"	88 I 3.465"	147,5 I 5.807"	182,8 I 7.197"	115,5 I 4.547"	150,8 I 5.937"	32 I 1.260"

Change shanks will be delivered with the according fastening screws (2 x 2411271).

Coolant operating closing device			CCD Size 2
Part No.	Qty.	Part description	Ident No.
1	1	Housing	7144713
2	1	Cover plate	7144714
3	1	Curved piston	7144715
4	1	Spring bolt	7159855
5	1	Chip guard	7151992
6	1	Ring sealing	7151997
7	1	Pressure spring	7170169
8	1	Cylindrical pin	2142691
9	2	Cylindrical pin	2142675
10	4	Screw	7123891
11	1	L- and I-Fitting G1/8"	7167804-L 7167806-I
12	2	Screw	2411271

Type	Ident No.
CCD EVOline Size 2	7144712

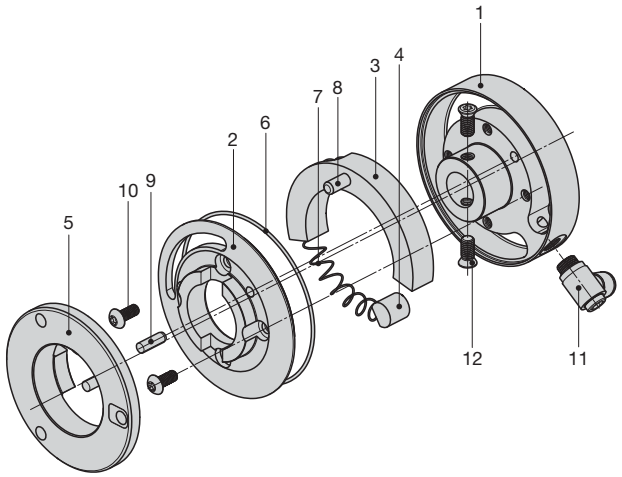

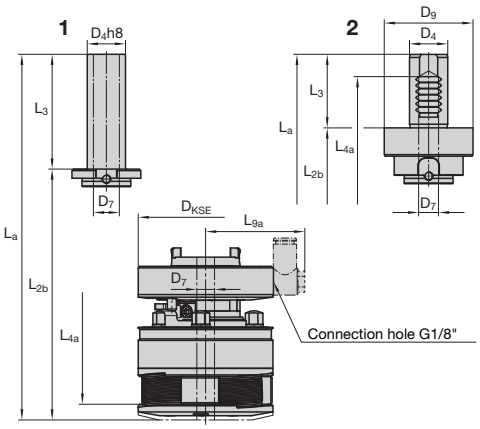

1 Straight shank

2 VDI shank

3 HSK shank

Others (upon request)

	L_4	L_{4a}	L_6	L_9	L_{9a}	L_{10}	m-Rs
	–	–	4 I 0.158"	69,1 I 2.721 "	Individual	6 I 0.236 "	appr. 0,22 kg appr. 0.49 lb
	–	–	4 I 0.158"	69,1 I 2.721 "	Individual	6 I 0.236 "	appr. 0,41 kg appr. 0.90 lb
	–	–	4 I 0.158"	69,1 I 2.721 "	Individual	6 I 0.236 "	appr. 0,23 kg appr. 0.51 lb
	–	–	4 I 0.158"	69,1 I 2.721 "	Individual	6 I 0.236 "	appr. 0,47 kg appr. 1.04 lb
	–	–	4 I 0.158"	69,1 I 2.721 "	Individual	6 I 0.236 "	appr. 0,71 kg appr. 1.57 lb
	88,5 I 3.484 "	123,8 I 4.874 "	4 I 0.158"	69,1 I 2.721 "	Individual	6 I 0.236 "	appr. 0,63 kg appr. 1.39 lb
	135,5 I 5.335 "	170,8 I 6.724 "	4 I 0.158"	69,1 I 2.721 "	Individual	6 I 0.236 "	appr. 0,83 kg appr. 1.83 lb
	138,5 I 5.453 "	173,8 I 6.843 "	4 I 0.158"	69,1 I 2.721 "	Individual	6 I 0.236 "	appr. 1,4 kg appr. 3.09 lb
	79 I 3.110 "	114,3 I 4.500 "	4 I 0.158"	69,1 I 2.721 "	Individual	6 I 0.236 "	appr. 0,84 kg appr. 1.85 lb

m-Rs = Weight shank

RH

LH

M

Nominal size x pitch mm	Lead 1k	Lead 2k
	Ident No.	
M 8 … 10 x 1,25	1509569	1509578
M 10 … 12 x 1,5	1509747	1509756
M 12 … 14 x 1,75	1509970	1509989
M 14 … 16 x 2	1510085	1510094

MF

Nominal size x pitch mm	Lead 1k	Lead 2k
	Ident No.	
MF 8 … 10 x 1	1509532	1509541
MF 10 … 12 x 1,25	1509676	1509685
MF 12 … 14 x 1,5	1509925	1509934

UNC

Nominal size x TPI	Lead 1k	Lead 2k
	Ident No.	
UNC 3/8 – 16	1510548	1510566
UNC 7/16 – 14	1510575	1510584
UNC 1/2 – 13	1510593	1510600
UNC 9/16 – 12	1510628	1510637
UNC 5/8 – 11	1510646	1510655

UNF

Nominal size x TPI	Lead 1k	Lead 2k
	Ident No.	
UNF 5/16… 3/8 – 24	1510717	1510726
UNF 7/16… 1/2 – 20	1510744	1510753
UNF 9/16… 5/8 – 18	1510762	1510771

BSF

Nominal size x TPI	Lead 1k	Lead 2k
	Ident No.	
BSF 5/16 – 22	1510334	2240407
BSF 3/8 – 20	1510352	1510361
BSF 7/16 – 18	1510370	1510389
BSF 1/2… 9/16 – 16	7180390	7180399
BSF 5/8… 11/16 – 14	7180391	1510423

Nominal size x pitch mm | inch	RAA	RGE
	Ident No.	
Ø 8 … Ø 10 x 0,5 | Ø 0.315 … Ø 0.394 x 0.02	2169065	2242649
Ø 10 … Ø 12 x 0,5 | Ø 0.394 … Ø 0.472 x 0.02	2168390	2242650
Ø 12 … Ø 14 x 0,5 | Ø 0.472 … Ø 0.551 x 0.02	2169722	2242651
Ø 14 … Ø 16 x 0,5 | Ø 0.551 … Ø 0.63 x 0.02	2165306	2242652
Ø 8 … Ø 10 x 0,6 | Ø 0.315 … Ø 0.394 x 0.024	2168916	2242653
Ø 10 … Ø 12 x 0,6 | Ø 0.394 … Ø 0.472 x 0.024	2165181	2242654
Ø 12 … Ø 14 x 0,6 | Ø 0.472 … Ø 0.551 x 0.024	2240175	1511119
Ø 14 … Ø 16 x 0,6 | Ø 0.551 … Ø 0.63 x 0.024	1510904	2242655
Ø 8 … Ø 10 x 0,8 | Ø 0.315 … Ø 0.394 x 0.031	2242640	1511128
Ø 10 … Ø 12 x 0,8 | Ø 0.394 … Ø 0.472 x 0.031	1510913	1511137
Ø 12 … Ø 14 x 0,8 | Ø 0.472 … Ø 0.551 x 0.031	2168836	1511146
Ø 14 … Ø 16 x 0,8 | Ø 0.551 … Ø 0.63 x 0.031	1510922	1511155
Ø 8 … Ø 10 x 1,0 | Ø 0.315 … Ø 0.394 x 0.039	1510931	1511173
Ø 10 … Ø 12 x 1,0 | Ø 0.394 … Ø 0.472 x 0.039	1510940	1511182
Ø 12 … Ø 14 x 1,0 | Ø 0.472 … Ø 0.551 x 0.039	1510959	1511191
Ø 14 … Ø 16 x 1,0 | Ø 0.551 … Ø 0.63 x 0.039	1510968	1511208
Ø 8 … Ø 10 x 1,2 | Ø 0.315 … Ø 0.394 x 0.047	2168835	2242656
Ø 10 … Ø 12 x 1,2 | Ø 0.394 … Ø 0.472 x 0.047	1510986	2167590
Ø 12 … Ø 14 x 1,2 | Ø 0.472 … Ø 0.551 x 0.047	1510995	2168410
Ø 14 … Ø 16 x 1,2 | Ø 0.551 … Ø 0.63 x 0.047	1511002	1511217
Ø 8 … Ø 10 x 1,5 | Ø 0.315 … Ø 0.394 x 0.059	2168834	2169196
Ø 10 … Ø 12 x 1,5 | Ø 0.394 … Ø 0.472 x 0.059	1511011	2168833
Ø 12 … Ø 14 x 1,5 | Ø 0.472 … Ø 0.551 x 0.059	1511020	2166950
Ø 14 … Ø 16 x 1,5 | Ø 0.551 … Ø 0.63 x 0.059	2167772	2168962
Ø 8 … Ø 10 x 1,6 | Ø 0.315 … Ø 0.394 x 0.063	2242641	2242657
Ø 10 … Ø 12 x 1,6 | Ø 0.394 … Ø 0.472 x 0.063	2242642	2242658
Ø 12 … Ø 14 x 1,6 | Ø 0.472 … Ø 0.551 x 0.063	2242643	2242659
Ø 14 … Ø 16 x 1,6 | Ø 0.551 … Ø 0.63 x 0.063	2242644	2168821
Ø 9 … Ø 10 x 2,0 | Ø 0.354 … Ø 0.394 x 0.079	2242645	2242660
Ø 10 … Ø 12 x 2,0 | Ø 0.394 … Ø 0.472 x 0.079	2242646	2242661
Ø 12 … Ø 14 x 2,0 | Ø 0.472 … Ø 0.551 x 0.079	2242647	2242662
Ø 14 … Ø 16 x 2,0 | Ø 0.551 … Ø 0.63 x 0.079	2242648	2242663

Nominal size mm | inch	Ident No.
Ø 8 – Ø 10 | Ø 0.315 – Ø 0.394	1511253
Ø 10 – Ø 12 | Ø 0.394 – Ø 0.472	1511262
Ø 12 – Ø 14 | Ø 0.472 – Ø 0.551	1511271
Ø 14 – Ø 16 | Ø 0.551 – Ø 0.63	1511280

BSW

Nominal size x TPI	Lead 1k	Lead 2k
	Ident No.	
BSW 3/8 – 16	1510236	1510245
BSW 7/16 – 14	1510263	1510272
BSW 1/2… 9/16 – 12	1510281	1510290
BSW 5/8 – 11	1510316	1510325

G

Nominal size x TPI	Lead 1k	Lead 2k
	Ident No.	
G 1/4 – 19	1510450	2168838

RD

Nominal size x TPI	Lead 1k	Lead 2k
	Ident No.	
Rd 16 x 1/8	2169921	2166994

NPT	
Nominal size x TPI	Lead 1k
	Ident No.
NPT 1/4 – 18	2164717

NPTF	
Nominal size x TPI	Lead 1k
	Ident No.
NPTF 1/4 – 18	2168616

Thread dimensions combined in one block can be rolled with **one** set of rolls.

Spare parts for axial type rolling head **F2 EVO**

Rolling head			F2 EVO	Rolling head			F2 EVO
Part No.	Qty.	Part description	Ident No.	Part No.	Qty.	Part description	Ident No.
1	1	Clutch	7137661	9-3	1	Threaded pin	7137658
2	1	Adjustment housing	7137662	9-4	1	Screw	1044990
3	1	Center plate	7137663	10	1	Coil spring	2164774
4	1	Front plate	7137664	11	1	Circlip	2164775
5	3	Eccentric spindle	2164770	12	1	Circlip DIN 471	7113298
6	3	Spacer stud	7137666	13	3	Carbide bushing	2164887
7	1	Center gear	7137667	14	3	Screw	7123891
8	3	Spur gear	7137668	15	3	Cover nut	2143536
9	1	Closing clip complete	7137669	16	3	Washer	2143365
9-1	1	Clip	7137656	17	1	Chip guard	7137672
9-2	1	Hand grip	7137657	18	3	Roll	individual

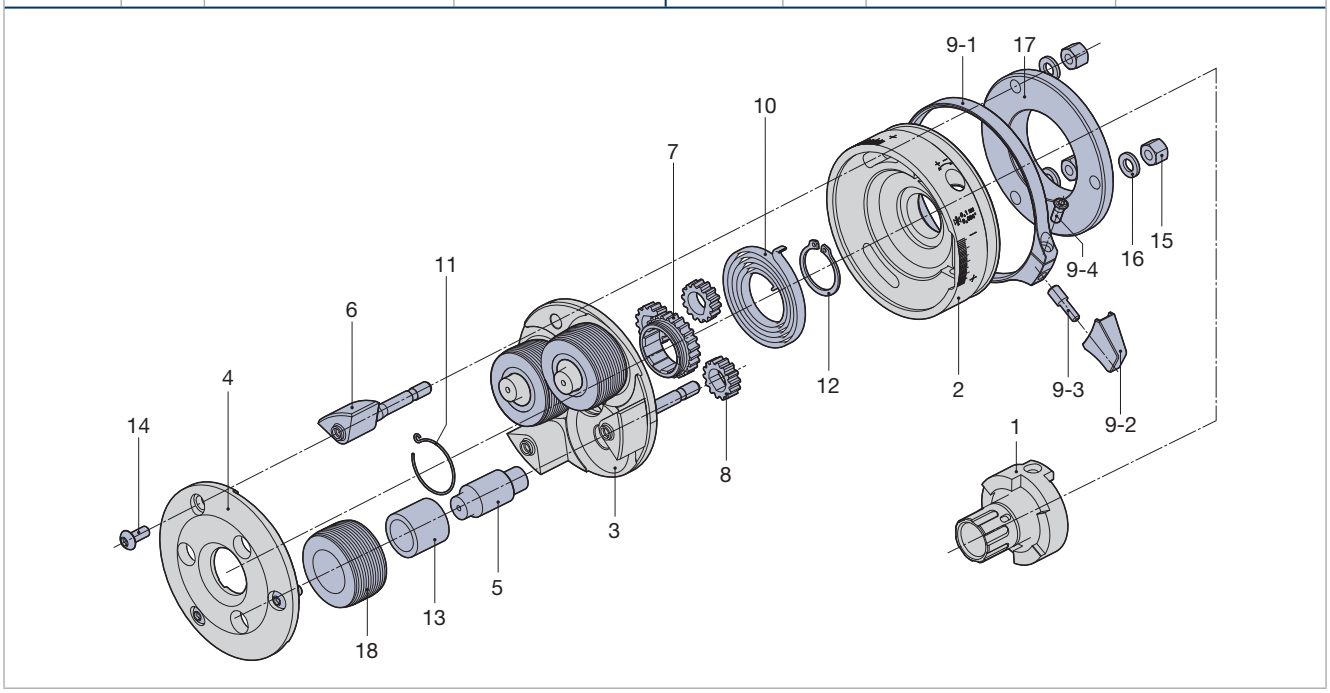

Type	Ident No.
F23 EVO	7155144
F23L EVO	7169600
K23 EVO	7169601
K23L EVO	7169602

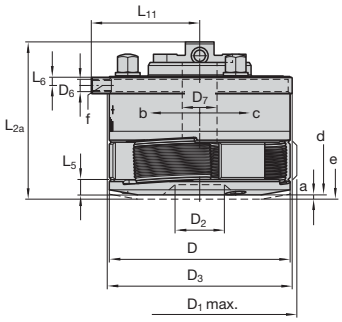

Dimension in mm / inches

D	D_{1max}	D_2	D_3	D_6	D_7	L_{2a}	L_5	L_6	L_{11}	a	α	γ
88	93,5	28	90	M 6	17	78,6	7,5	4	52,8	3	60°	1° 25'
3.465"	3.681"	1.102"	3.543"		0.669"	3.094"	0.295"	0.158"	2.079"	0.118"		

m-Rk	m-Ro
appr. 1,86 kg	0,17–0,32 kg
appr. 4.10 lb	0.37–0.71 lb

F23 EVO, K23 EVO for right-hand threads
F23L EVO, K23L EVO for left-hand threads
F23 EVO, F23L EVO to be used stationary only
K23 EVO, K23L EVO used stationary or rotating

a = Pull off for opening
b = Head closes when type F
c = Head opens when type F
d = Rolling head closed
e = Rolling head opened
f = Thread for hand grip with stationary operation
α = Closing angle
γ = Inclined position of rolls
m-Rk = Rolling head weight without shank and rolls
m-Ro = Weight of 1 set of 3 rolls

Change shanks **EVOline**

Type	Ident No.
R25-size 2	7137673
R30-size 2	7139612
R1-size 2	7139614
R1 1/4-size 2	7139616
R1 1/2-size 2	7139618
VDI-25-size 2	7139620
VDI-30-size 2	7139622
VDI-40-size 2	7139624
HSK-A63-size 2	7139626

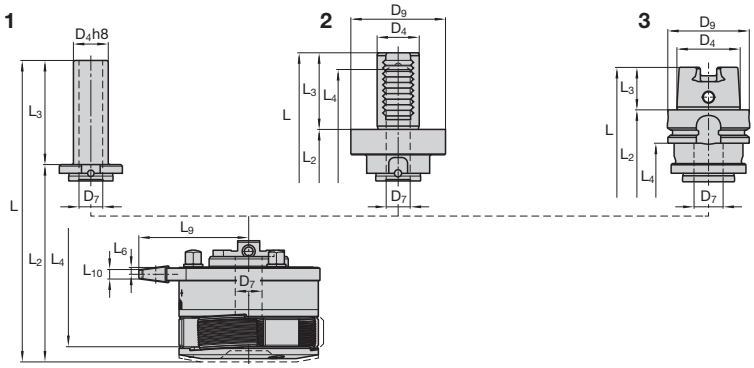

Shank Ø	Dimension in mm / inches								
	D_4	D_7	D_9	D_{KSE}	L	L_a	L_2	L_{2b}	L_3
25	25 I 0.984"	17 I 0.669"	–	88 I 3.465"	153,6 I 6.047"	189 I 7.441"	78,6 I 3.094"	114 I 4.488"	75 I 2.953"
30	30 I 1.181"	17 I 0.669"	–	88 I 3.465"	168,6 I 6.638"	204 I 8.032"	78,6 I 3.094"	114 I 4.488"	90 I 3.543"
1	25,4 I 1.000"	17 I 0.669"	–	88 I 3.465"	153,6 I 6.047"	189 I 7.441"	78,6 I 3.094"	114 I 4.488"	75 I 2.953"
1 1/4	31,75 I 1.250"	17 I 0.669"	–	88 I 3.465"	168,6 I 6.638"	204 I 8.032"	78,6 I 3.094"	114 I 4.488"	90 I 3.543"
1 1/2	38,1 I 1.500"	17 I 0.669"	–	88 I 3.465"	168,6 I 6.638"	204 I 8.032"	78,6 I 3.094"	114 I 4.488"	90 I 3.543"
VDI-25	25 I 0.984"	17 I 0.669"	58 I 2.283"	88 I 3.465"	151,6 I 5.969"	187 I 7.362"	104,1 I 4.098"	139 I 5.472"	48 I 1.890"
VDI-30	30 I 1.181"	17 I 0.669"	68 I 2.677"	88 I 3.465"	159,1 I 6.264"	194,5 I 7.658"	104,1 I 4.098"	139,5 I 5.492"	55 I 2.165"
VDI-40	40 I 1.575"	17 I 0.669"	83 I 3.268"	88 I 3.465"	167,1 I 6.579"	202,5 I 7.972"	104,1 I 4.098"	139,5 I 5.492"	63 I 2.480"
HSK-A63	48 I 1.890"	17 I 0.669"	63 I 2.480"	88 I 3.465"	148,6 I 5.850"	184 I 7.244"	116,6 I 4.591"	152 I 5.984"	32 I 1.260"

Change shanks will be delivered with the according fastening screws (2 x 2411271).

Coolant operating closing device			CCD Size 2
Part No.	Qty.	Part description	Ident No.
1	1	Housing	7144713
2	1	Cover plate	7144714
3	1	Curved piston	7144715
4	1	Spring bolt	7159855
5	1	Chip guard	7151992
6	1	Ring sealing	7151997
7	1	Pressure spring	7170169
8	1	Cylindrical pin	2142691
9	2	Cylindrical pin	2142675
10	4	Screw	7123891
11	1	L- and I-Fitting G1/8"	7167804-L 7167806-I
12	2	Screw	2411271

Type	Ident No.
CCD EVOline Size 2	7144712

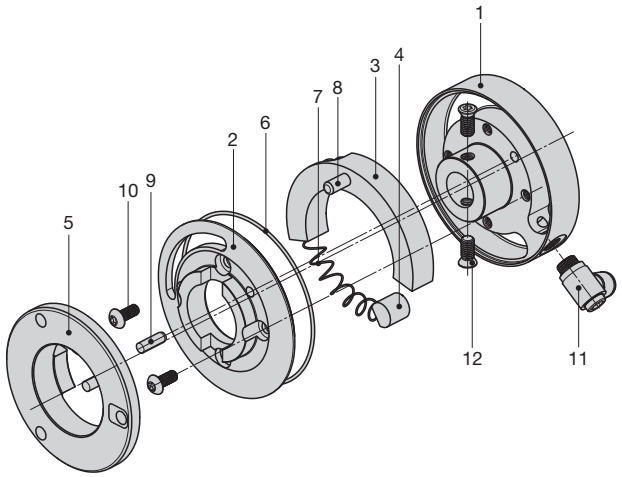

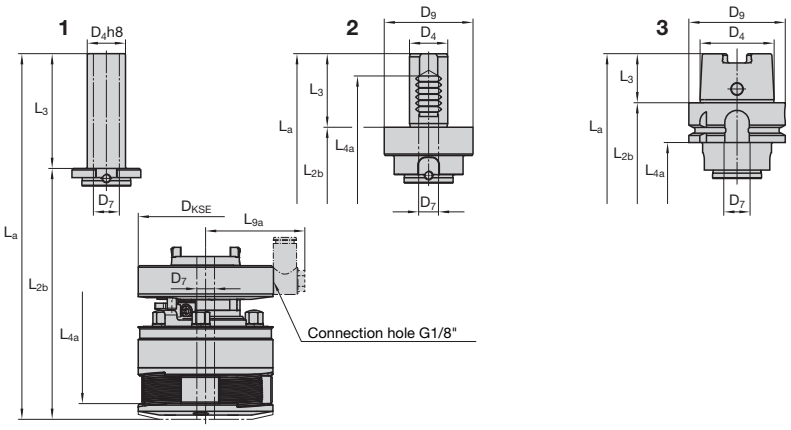

1 Straight shank

2 VDI shank

3 HSK shank

Others (upon request)

	L_4	L_{4a}	L_6	L_9	L_{9a}	L_{10}	m-Rs
	–	–	4 I 0.157"	69,1 I 2.721"	Individual	6 I 0.236"	appr. 0,22 kg appr. 0.49 lb
	–	–	4 I 0.157"	69,1 I 2.721"	Individual	6 I 0.236"	appr. 0,41 kg appr. 0.90 lb
	–	–	4 I 0.157"	69,1 I 2.721"	Individual	6 I 0.236"	appr. 0,23 kg appr. 0.51 lb
	–	–	4 I 0.157"	69,1 I 2.721"	Individual	6 I 0.236"	appr. 0,47 kg appr. 1.04 lb
	–	–	4 I 0.157"	69,1 I 2.721"	Individual	6 I 0.236"	appr. 0,71 kg appr. 1.57 lb
	89,6 I 3.528"	125 I 4.921"	4 I 0.157"	69,1 I 2.721"	Individual	6 I 0.236"	appr. 0,63 kg appr. 1.39 lb
	136,6 I 5.378"	172 I 6.772"	4 I 0.157"	69,1 I 2.721"	Individual	6 I 0.236"	appr. 0,83 kg appr. 1.83 lb
	139,6 I 5.496"	175 I 6.890"	4 I 0.157"	69,1 I 2.721"	Individual	6 I 0.236"	appr. 1,4 kg appr. 3.09 lb
	80,1 I 3.154"	115,5 I 4.547"	4 I 0.157"	69,1 I 2.721"	Individual	6 I 0.236"	appr. 0,84 kg appr. 1.85 lb

m-Rs = Weight shank

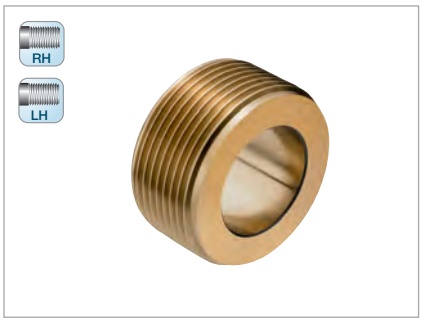

MF

Nominal size x pitch mm	Lead 1k	Lead 2k
	Ident No.	
MF 8 ... 10 x 0,5	1511725	2242958
MF 8 ... 10 x 0,75	1511707	1511716
MF 10 ... 12 x 0,75	1511743	1511752
MF 10 ... 12 x 1	1511770	1511789
MF 12 ... 14 x 1	1511798	1511814
MF 14 ... 16 x 1	1511887	1511912
MF 16 ... 18[1)] x 1	1511985	1511994
MF 18[1)] ... 20[1)] x 1	1512074	1512083
MF 14 ... 16 x 1,25	1511949	1511958
MF 16 ... 18[1)] x 1,5	1512029	1512038
MF 18[1)] ... 20[1)] x 1,5	1512127	1512136
MF 20[1)] ... 22[1)] x 1,5	1512172	1512181

UN UNF UNEF

Nominal size x TPI	Lead 1k	Lead 2k
	Ident No.	
UNEF 5/16 ... 3/8 – 32	1512403	1512412
UNEF 3/8 ... 7/16 – 32	2242901	2242902
UNEF 7/16 ... 1/2 – 28	1512378	2242903
UN 7/16 ... 1/2 – 32	2240057	2168596
UN 1/2 ... 9/16 – 20	1512421	1512430
UN 1/2 ... 9/16 – 28	2242730	2242905
UN 1/2 ... 9/16 – 32	2242906	2242907
UNF 9/16 ... 5/8 – 18	1512494	1512500
UN 9/16 ... 5/8 – 20	2168849	2168772
UNEF 9/16 ... 5/8 – 24	2169198	2242908
UN 9/16 ... 5/8 – 28	2242288	2242909
UN 9/16 ... 5/8 – 32	2242087	1512369
UN 5/8 ... 11/16[1)] – 16	2242911	2242912
UN 5/8 ... 11/16[1)] – 20	2242913	2242914
UNEF 5/8 ... 11/16[1)] – 24	2242915	2242916
UN 5/8 ... 11/16[1)] – 28	2242917	2242918
UNF 11/16[1)] ... 3/4[1)] – 16	1512449	1512458
UNEF 11/16[1)] ... 3/4[1)] – 20	1512387	1512396
UN 3/4[1)] ... 13/16[1)] – 16	2245452	2242920
UNEF 3/4[1)] ... 13/16[1)] – 20	2242921	2242922
UNEF 13/16[1)] ... 7/8[1)] – 20	2242923	2242924

BSFS

Nominal size x TPI	Lead 1k	Lead 2k
	Ident No.	
BSFS 5/16 ... 3/8 – 32	2242881	2242882
BSFS 7/16 ... 1/2 – 26	2168872	2242883
BSFS 1/2 ... 9/16 – 20	2240199	2242884
BSFS 1/2 ... 9/16 – 26	2242885	2242886
BSFS 9/16 ... 5/8 – 20	2240198	2242887
BSFS 9/16 ... 5/8 – 26	2242888	2242889
BSFS 5/8 ... 11/16[1)] – 20	2242890	2242891
BSFS 5/8 ... 11/16[1)] – 26	2242892	2242893
BSFS 3/4[1)] ... 13/16[1)] – 26	2242894	2242895
BSFS 3/4[1)] ... 13/16[1)] – 16	2245304	2245305
BSFS 3/4[1)] ... 13/16[1)] – 20	2242897	2242898
BSFS 13/16[1)] ... 7/8[1)] – 20	2242899	2242900

G

Nominal size x TPI	Lead 1k	Lead 2k
	Ident No.	
G 1/8 – 28	1512305	1512314
G 1/4 – 19	1512323	1512332
G 3/8[1)] – 19	1512341	1512350
G 1/2[1)] – 14	1512519	2168208

NPT

Nominal size x TPI	Lead 1k
	Ident No.
NPT 1/8 – 27	2165335
NPT 1/4 – 18	2164611
NPT 3/8 – 18	2166779

NPTF

Nominal size x TPI	Lead 1k
	Ident No.
NPTF 1/8 – 27	2164629
NPTF 1/4 – 18	2166947
NPTF 3/8 – 18	2168651

Thread dimensions combined in one block can be rolled with **one** set of rolls.

1) For short threads up to 19 mm/0.748" including runout.

Rolling head			F23 EVO	Rolling head			F23 EVO
Part No.	Qty.	Part description	Ident No.	Part No.	Qty.	Part description	Ident No.
1	1	Clutch	7137661	9-4	1	Screw	1044990
2	1	Adjustment housing	7137662	10	1	Coil spring	2164774
3	1	Center plate	7155528	11	1	Circlip	2164775
4	1	Front plate	7155531	12	1	Circlip DIN 471	7113298
5	3	Eccentric spindle	2164931	13	3	Carbide bushing	2164705
6	3	Spacer stud	7155532	14	3	Screw	7123891
7	1	Center gear	7155534	15	3	Cover nut	2143536
8	3	Spur gear	7155533	16	3	Washer	2143365
9	1	Closing clip complete	7137669	17	1	Chip guard	7137672
9-1	1	Clip	7137656	18	3	Roll	individual
9-2	1	Hand grip	7137657	19	3	Washer	2164935
9-3	1	Threaded pin	7137658				

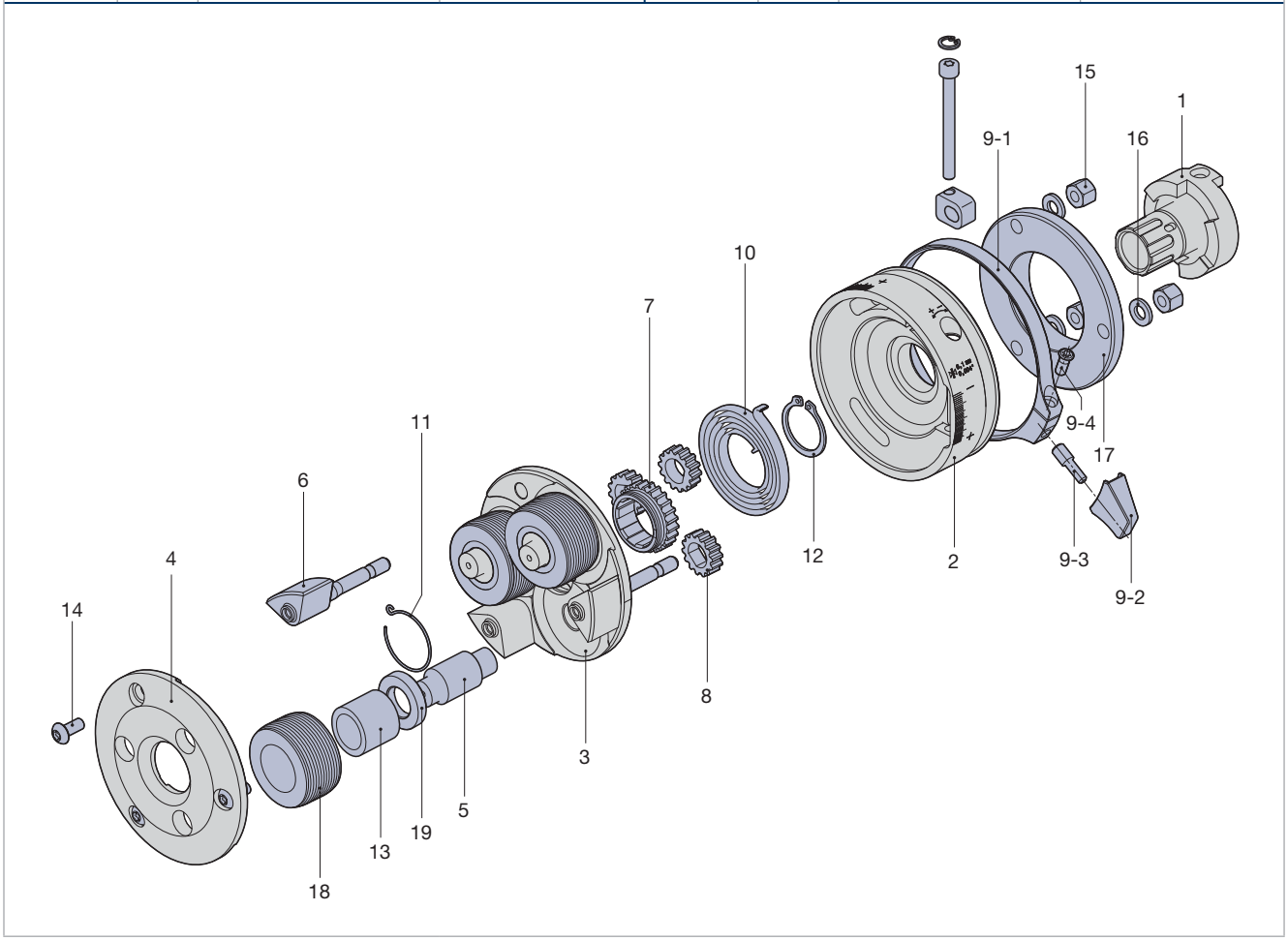

Axial type rolling head **F233400 EVO, K233400 EVO** NEW

Type	Ident No.
F233400 EVO	7156345
F233400L EVO	7169603
K233400 EVO	7169604
K233400L EVO	7169605

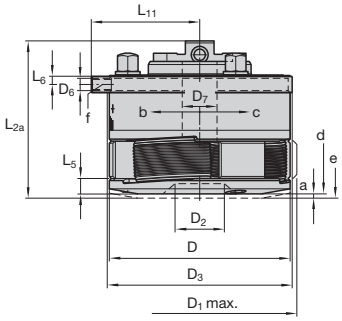

Dimension in mm / inches

D	D_{1max}	D_2	D_3	D_6	D_7	L_{2a}	L_5	L_6	L_{11}	a	α	γ
96	115	39	98	M 6	28	96	8	4	56,8	3	30°	1° 15'
3.780"	4.528"	1.535"	3.858"		1.102"	3.780"	0.315"	0.158"	2.236"	0.118"		

m-Rk	m-Ro
appr. 3,4 kg appr. 7.5 lb	0,185–0,4 kg 0.41–0.88 lb

F233400 EVO, K233400 EVO for right-hand threads
F233400L EVO, K233400L EVO for left-hand threads
F233400 EVO, F233400L EVO to be used stationary only
K233400 EVO, K233400L EVO used stationary or rotating

a = Pull off for opening
b = Head closes when type F
c = Head opens when type F
d = Rolling head closed
e = Rolling head opened
f = Thread for hand grip with stationary operation
α = Closing angle
γ = Inclined position of rolls
m-Rk = Rolling head weight without shank and rolls
m-Ro = Weight of 1 set of 3 rolls

Change shanks **EVOline**

Type	Ident No.
R25-size 2	7139628
R30-size 2	7139630
R1-size 2	7139632
R1 1/4-size 2	7139634
R1 1/2-size 2	7139636
VDI-25-size 2	7139638
VDI-30-size 2	7139640
VDI-40-size 2	7139642
HSK-A63-size 2	7139644

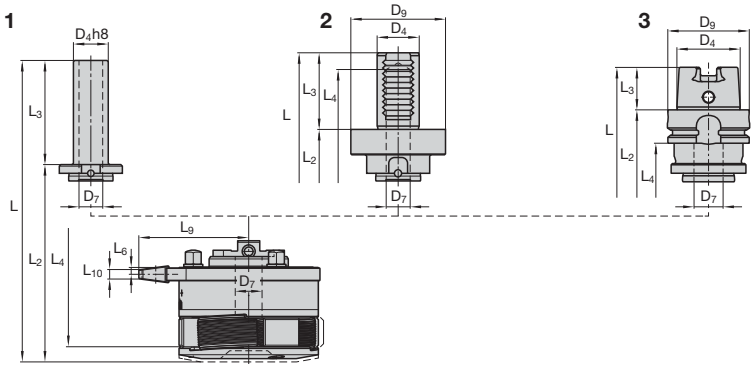

Shank Ø	Dimension in mm / inches								
	D_4	D_7	D_9	D_{KSE}	L	L_a	L_2	L_{2b}	L_3
25	25 I 0.984"	17 I 0.669"	–	113 I 4.449"	171 I 6.732"	210,4 I 8.284"	96 I 3.779"	135,4 I 5.331"	75 I 2.953"
30	30 I 1.181"	22,5 I 0.886"	–	113 I 4.449"	186 I 7.322"	225,4 I 8.874"	96 I 3.779"	135,4 I 5.331"	90 I 3.543"
1	25,4 I 1.000"	17 I 0.669"	–	113 I 4.449"	171 I 6.732"	210,4 I 8.284"	96 I 3.779"	135,4 I 5.331"	75 I 2.953"
1 1/4	31,75 I 1.250"	22,5 I 0.886"	–	113 I 4.449"	186 I 7.322"	225,4 I 8.874"	96 I 3.779"	135,4 I 5.331"	90 I 3.543"
1 1/2	38,1 I 1.500"	22,5 I 0.886"	–	113 I 4.449"	186 I 7.322"	225,4 I 8.874"	96 I 3.779"	135,4 I 5.331"	90 I 3.543"
VDI-25	25 I 0.984"	22,5 I 0.886"	58 I 2.283"	113 I 4.449"	167 I 6.574"	206,4 I 8.126"	119 I 4.685"	158,4 I 6.236"	48 I 1.890"
VDI-30	30 I 1.181"	22,5 I 0.886"	68 I 2.677"	113 I 4.449"	176,5 I 6.949"	215,9 I 8.500"	121,5 I 4.783"	160,9 I 6.335"	55 I 2.165"
VDI-40	40 I 1.575"	22,5 I 0.886"	83 I 3.268"	113 I 4.449"	184,5 I 7.264"	223,9 I 8.815"	121,5 I 4.783"	160,9 I 6.335"	63 I 2.480"
HSK-A63	48 I 1.890"	22,5 I 0.886"	63 I 2.480"	113 I 4.449"	170,5 I 6.713"	209,9 I 8.264"	138,5 I 5.453"	177,9 I 7.004"	32 I 1.260"

Change shanks will be delivered with the according fastening screws (2 x 7145916).

Coolant operating closing device			CCD Size 3 (F233400)
Part No.	Qty.	Part description	Ident No.
1	1	Housing	7137676
2	1	Cover plate	7137677
3	1	Curved piston	7137678
4	1	Spring bolt	7137679
5	1	Chip guard	7156379
6	1	Ring sealing	7137674
7	1	Pressure spring	7155154
8	1	Cylindrical pin	2142691
9	2	Cylindrical pin	2142688
10	4	Screw	7123891
11	1	L- and I-Fitting G1/8"	7167804-L 7167806-I
12	2	Screw	7145916

Type	Ident No.
CCD EVOline Size 3 (F233400)	7137680

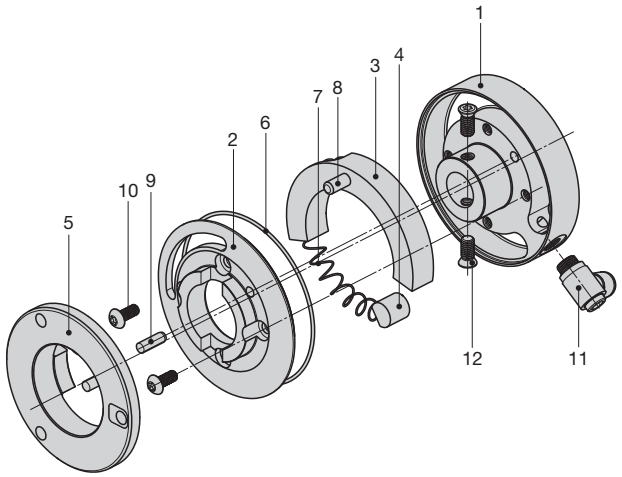

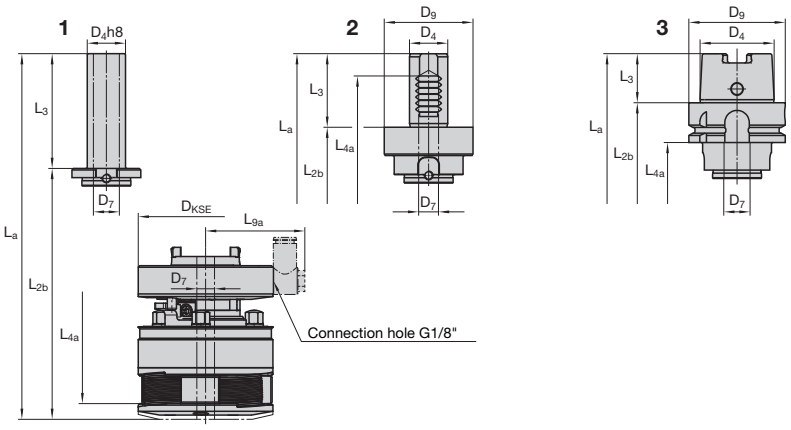

1 Straight shank

2 VDI shank

3 HSK shank

Others (upon request)

	L_4	L_{4a}	L_6	L_9	L_{9a}	L_{10}	m-Rs
	–	–	4 I 0.158"	73,8 I 2.906"	Individual	6 I 0.236"	appr. 0,34 kg appr. 0.75 lb
	–	–	4 I 0.158"	73,8 I 2.906"	Individual	6 I 0.236"	appr. 0,37 kg appr. 0.82 lb
	–	–	4 I 0.158"	73,8 I 2.906"	Individual	6 I 0.236"	appr. 0,34 kg appr. 0.75 lb
	–	–	4 I 0.158"	73,8 I 2.906"	Individual	6 I 0.236"	appr. 0,37 kg appr. 0.82 lb
	–	–	4 I 0.158"	73,8 I 2.906"	Individual	6 I 0.236"	appr. 0,4 kg appr. 0.88 lb
	104,4 I 4.110"	143,9 I 5.665"	4 I 0.158"	73,8 I 2.906"	Individual	6 I 0.236"	appr. 0,7 kg appr. 1.54 lb
	107,4 I 4.228"	146,9 I 5.784"	4 I 0.158"	73,8 I 2.906"	Individual	6 I 0.236"	appr. 0,94 kg appr. 2.07 lb
	156,4 I 6.158"	195,9 I 7.713"	4 I 0.158"	73,8 I 2.906"	Individual	6 I 0.236"	appr. 1,42 kg appr. 3.13 lb
	101,4 I 3.992"	140,9 I 5.547"	4 I 0.158"	73,8 I 2.906"	Individual	6 I 0.236"	appr. 1 kg appr. 2.21 lb

m-Rs = Weight shank

RH

LH

MF

Nominal size x pitch mm	Lead 1k	Lead 2k
	Ident No.	
MF 16[1] ... 18[1] x 1,5	1513037	1513064
MF 18[1] ... 20[1] x 1,5	1513073	1513091
MF 20[1] ... 22[1] x 1,5	1513108	1513126
MF 22[1] ... 24[1] x 1,5	1513144	1513153
MF 24[1] ... 26[1] x 1,5	1513171	1513180
MF 26[1] ... 28[2] x 1,5	1513233	1513242
MF 28[2] ... 30[2] x 1,5	2246617	2243039
MF 30[2] ... 32[2] x 1,5	1513297	1513304
MF 32[2] ... 34[2] x 1,5	1513340	1513359
MF 34[2] ... 36[2] x 1,5	2243042	1513386
MF 22[1] ... 24[1] x 2	1513162	2243044
MF 24[1] ... 26[1] x 2	1513199	2169638
MF 26[1] ... 28[2] x 2	1513251	2243045
MF 28[2] ... 30[2] x 2	1513288	2243046
MF 30[2] ... 32[2] x 2	1513313	1513331
MF 32[2] ... 34[2] x 2	1513368	2243047
MF 34[2] ... 36[2] x 2	1513402	2243048

BSFS

Nominal size x TPI	Lead 1k	Lead 2k
	Ident No.	
BSFS 5/8[1] ...11/16[1]–26	2243111	2243112
BSFS 5/8[1] ...11/16[1]–20	2243113	2243114
BSFS 11/16[1] ...3/4[1] –26	2243115	2243116
BSFS 11/16[1] ...3/4[1] –20	2243117	2243118
BSFS 11/16[1] ...3/4[1] –16	2243119	2243120
BSFS 3/4[1] ...13/16[1])–26	2243121	2243122
BSFS 3/4[1] ...13/16[1])–20	2243123	2168612
BSFS 3/4[1] ...13/16[1])–16	2243124	2169760
BSFS 13/16[1] ...7/8[1] –20	2243125	2243126
BSFS 7/8[1] ...15/16[1])–20	2243127	2243128
BSFS 15/16[1] ...1[1] –20	2243129	2168574
BSFS 1[1] ...11/16[1])–20	2243130	2243131
BSFS 1 1/16[1])...1 1/8[2]) –20	2243132	2232133
BSFS 1 1/8[2]) ...1 3/16[2])–20	2243134	2243135
BSFS 1 1/8[2]) ...1 3/16[2])–12	2243136	2243137
BSFS 1 3/16[2])...1 1/4[2]) –12	2243138	2243139
BSFS 1 1/4[2]) ...1 5/16[2])–12	2243140	2243141
BSFS 1 5/16[2])...1 3/8[2]) –12	2243142	2243143
BSFS 1 3/8[2]) ...1 7/16[2])–12	2243144	2243145

UN UNF UNEF

Nominal size x TPI	Lead 1k	Lead 2k
	Ident No.	
UNF 5/8[1]) –18	2167797	2241562
UNEF 5/8[1]) –24	2243148	2243063
UN 5/8[1]) ...11/16[1])–20	2243064	2243065
UNEF 11/16[1])–24	2243066	2243067
UN 11/16[1]) ...3/4[1]) –20	2166139	2243068
UNF 11/16[1]) ...3/4[1]) –16	2167188	2242668
UN 3/4[1]) –24	2240085	2243069
UNEF 3/4[1]) ...13/16[1])–20	2243070	2243071
UN 3/4[1]) ...13/16[1])–16	2167189	1513554
UNEF 13/16[1]) ...7/8[1]) –20	2169153	2243072
UN 13/16[1]) ...7/8[1]) –16	2243073	2243074
UNF 13/16[1]) ...7/8[1]) –14	1513563	1513572
UNEF 7/8[1]) ...15/16[1])–20	2168774	2243075
UN 7/8[1]) ...15/16[1])–16	2169149	2242227
UNF 7/8[1]) ...15/16[1])–14	2243076	2243077
UN 7/8[1]) ...15/16[1])–12	2166038	2243078
UNEF 15/16[1]) ...1[1]) –20	2242407	2243079
UN 15/16[1]) ...1[1]) –16	2243080	2243081
UNF 15/16[1]) ...1[1]) –12	2243082	2167075
UNEF 1[1]) ...1 1/16[1])– 20	2169150	2243083
UNEF 1[1]) ...1 1/16[1])–18	2243084	2243085
UN 1[1]) ...1 1/16[1])–16	2168340	2166867
UNF 1[1]) ...1 1/16[1])–12	2168130	2243086
UN 1 1/16[1]) ...1 1/8[2]) –20	2169148	2243087
UNEF 1 1/16[1]) ...1 1/8[2]) –18	2240059	2243088
UNEF 1 1/16[1]) ...1 1/8[2]) –16	2168691	2243089
UNF 1 1/16[1]) ...1 1/8[2]) –12	2242012	2243090
UN 1 1/8[2]) ...1 3/16[2])–20	2243091	2243092
UNEF 1 1/8[2]) ...1 3/16[2])–18	2243093	2243094
UN 1 1/8[2]) ...1 3/16[2])–16	2243095	2243096
UN 1 1/8[2]) ...1 3/16[2])–12	2241120	2243097
UN 1 3/16[2]) ...1 1/4[2]) –16	2168027	2243098
UN 1 3/16[2]) ...1 1/4[2]) –12	2243099	2243100
UN 1 1/4[2]) ...1 5/16[2])–16	2243101	2243102
UN 1 1/4[2]) ...1 5/16[2])–12	2165845	2243103
UN 1 5/16[2]) ...1 3/8[2]) –16	2243104	2243105
UN 1 5/16[2]) ...1 3/8[2]) –12	2243106	2243107
UN 1 3/8[2]) ...1 7/16[2])–16	2242215	2243108
UN 1 3/8[2]) ...1 7/16[2])–12	2243109	2243110

G

Nominal size x TPI	Lead 1k	Lead 2k
	Ident No.	
G 3/8[2]) – 19	1513411	1513439
G 1/2[1]) – 14	1513448	2168886
G 5/8[1]) – 14	1513466	2243146
G 3/4[1]) – 14	1513484	2243147
G 7/8[1]) – 14	1513509	1513518
G 1[2]) – 11	1513527	2241298

NPT

Nominal size x TPI	Lead 1k
	Ident No.
NPT 3/8 – 18	2164626

NPTF

Nominal size x TPI	Lead 1k
	Ident No.
NPTF 3/8 – 18	2165232

Thread dimensions combined in one block can be rolled with **one** set of rolls.

1) For short threads up to 73 mm/2.638" including runout.
2) For short threads up to 24 mm/1.063" including runout.

Rolling head			F233400 EVO	Rolling head			F233400 EVO
Part No.	Qty.	Part description	Ident No.	Part No.	Qty.	Part description	Ident No.
1	1	Clutch	7156369	9-4	1	Screw	1044990
2	1	Adjustment housing	7156370	10	1	Coil spring	2164974
3	1	Center plate	7156363	11	1	Circlip	2164975
4	1	Front plate	7156364	12	1	Circlip DIN 471	7161312
5	3	Eccentric spindle	2164969	13	3	Carbide bushing	2168237
6	3	Spacer stud	7156365	14	3	Screw	7123891
7	1	Center gear	7156367	15	3	Cover nut	2143583
8	3	Spur gear	7156368	16	3	Washer	2143366
9	1	Closing clip complete	7156374	17	1	Chip guard	7156376
9-1	1	Clip	7156375	18	3	Roll	individual
9-2	1	Hand grip	7137657	19	3	Washer	2164978
9-3	1	Threaded pin	7137658				

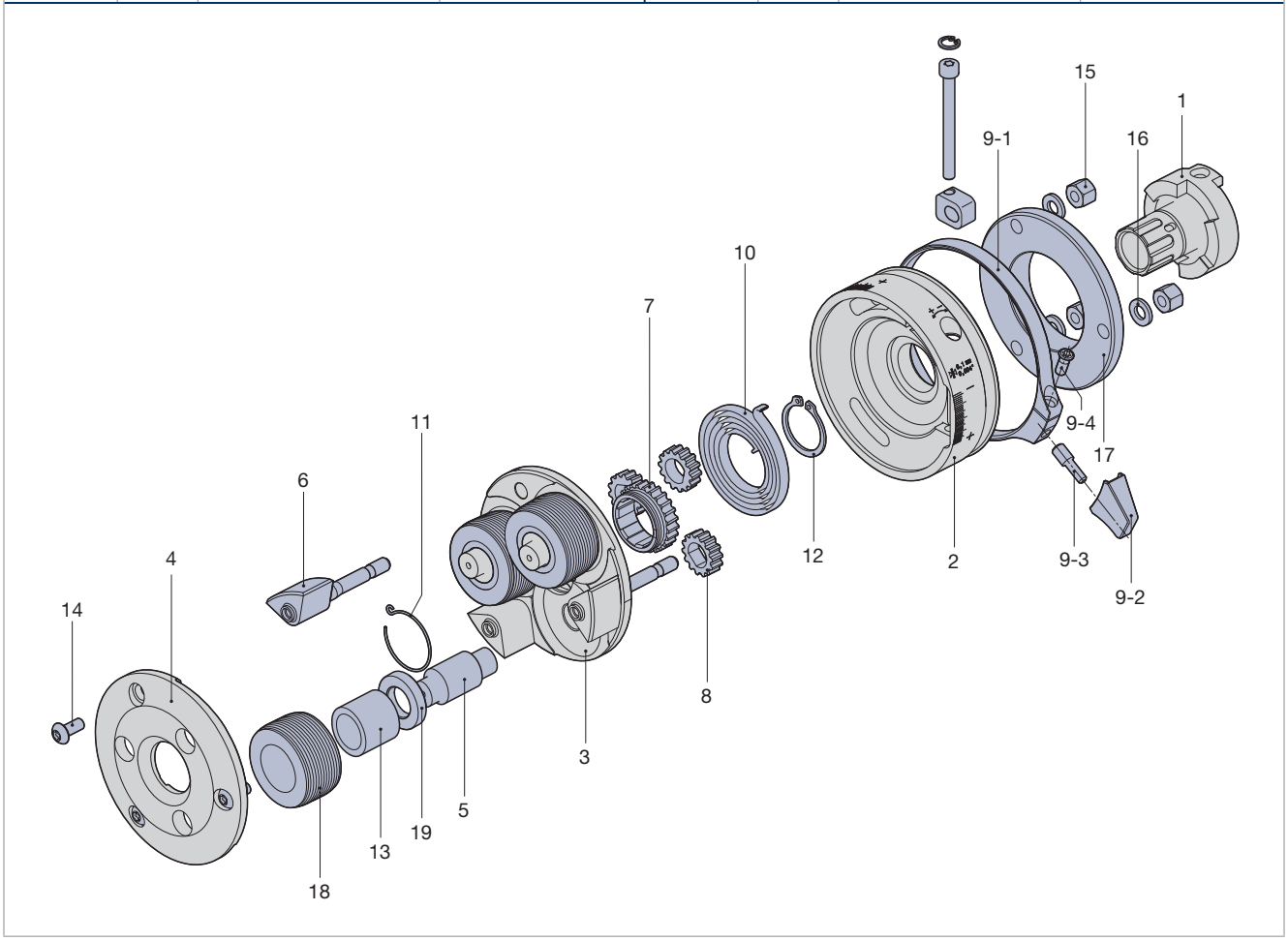

Type	Ident No.
F3 EVO	7146720
F3L EVO	7169606
K3 EVO	7169607
K3L EVO	7169608

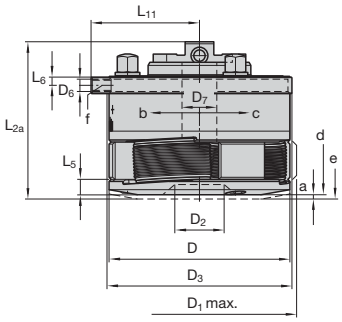

Dimension in mm / inches

D	D_{1max}	D_2	D_3	D_6	D_7	L_{2a}	L_5	L_6	L_{11}	a	α	γ		
117	131	38	119	M 8	22,5	95,4	8	5	66,8	4	60°	2° 40'		
4.606"	5.157"	1.496"	4.685"		0.886"	3.756"	0.315"	0.197"	2.630"	0.157"				

m-Rk	m-Ro
appr. 4 kg	0,75–1,2 kg
appr. 8.82 lb	1.65–2.65 lb

F3 EVO, K3 EVO for right-hand threads
F3L EVO, K3L EVO for left-hand threads
F3 EVO, F3L EVO to be used stationary only
K3 EVO, K3L EVO used stationary or rotating

a = Pull off for opening
b = Head closes when type F
c = Head opens when type F
d = Rolling head closed
e = Rolling head opened
f = Thread for hand grip with stationary operation
α = Closing angle
γ = Inclined position of rolls
m-Rk = Rolling head weight without shank and rolls
m-Ro = Weight of 1 set of 3 rolls

Change shanks **EVOline**

Type	Ident No.
R25-size 3	7139628
R30-size 3	7139630
R1-size 3	7139632
R1 1/4-size 3	7139634
R1 1/2-size 3	7139636
VDI-25-size 3	7139638
VDI-30-size 3	7139640
VDI-40-size 3	7139642
HSK-A63-size 3	7139644

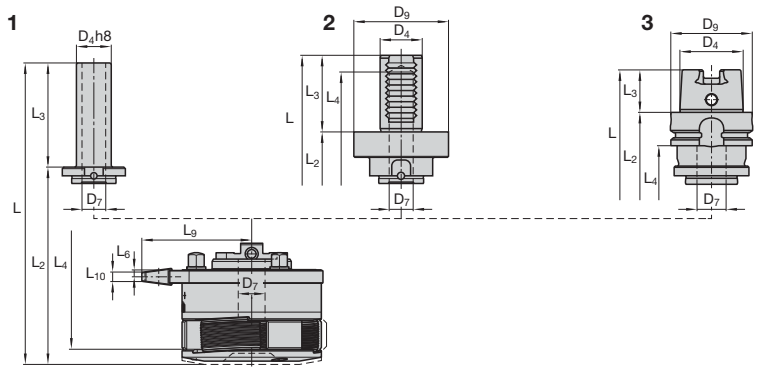

Shank Ø	Dimension in mm / inches								
	D_4	D_7	D_9	D_{KSE}	L	L_a	L_2	L_{2b}	L_3
25	25 I 0.984"	17 I 0.669"	–	113 I 4.449"	170,4 I 6.709"	210 I 8.268"	95,4 I 3.756"	135 I 5.315"	75 I 2.953"
30	30 I 1.181"	22,5 I 0.886"	–	113 I 4.449"	185,4 I 7.299"	225 I 8.858"	95,4 I 3.756"	135 I 5.315"	90 I 3.543"
1	25,4 I 1.000"	17 I 0.669"	–	113 I 4.449"	170,4 I 6.709"	210 I 8.268"	95,4 I 3.756"	135 I 5.315"	75 I 2.953"
1 1/4	31,75 I 1.250"	22,5 I 0.886"	–	113 I 4.449"	185,4 I 7.299"	225 I 8.858"	95,4 I 3.756"	135 I 5.315"	90 I 3.543"
1 1/2	38,1 I 1.500"	22,5 I 0.886"	–	113 I 4.449"	185,4 I 7.299"	225 I 8.858"	95,4 I 3.756"	135 I 5.315"	90 I 3.543"
VDI-25	25 I 0.984"	22,5 I 0.886"	58 I 2.283"	113 I 4.449"	166,4 I 6.551"	206 I 8.110"	118,4 I 4.664"	158 I 6.220"	48 I 1.890"
VDI-30	30 I 1.181"	22,5 I 0.886"	68 I 2.677"	113 I 4.449"	175,9 I 6.925"	215,5 I 8.484"	120,9 I 4.760"	160,5 I 6.319"	55 I 2.165"
VDI-40	40 I 1.575"	22,5 I 0.886"	83 I 3.268"	113 I 4.449"	183,9 I 7.240"	223,5 I 8.799"	120,9 I 4.760"	160,5 I 6.319"	63 I 2.480"
HSK-A63	48 I 1.890"	22,5 I 0.886"	63 I 2.480"	113 I 4.449"	169,9 I 6.689"	209,5 I 8.248"	137,9 I 5.429"	177,5 I 6.988"	32 I 1.260"

Change shanks will be delivered with the according fastening screws (2 x 7145916).

Coolant operating closing device			CCD Size 3 (F3/F34)
Part No.	Qty.	Part description	Ident No.
1	1	Housing	7137676
2	1	Cover plate	7137677
3	1	Curved piston	7137678
4	1	Spring bolt	7137679
5	1	Chip guard	7146737
6	1	Ring sealing	7137674
7	1	Pressure spring	7155154
8	1	Cylindrical pin	2142691
9	2	Cylindrical pin	2142688
10	4	Screw	7123891
11	1	L- and I-Fitting G1/8"	7167804-L 7167806-I
12	2	Screw	7145916

Type	Ident No.
CCD EVOline Size 3 (F3/F34)	7137675

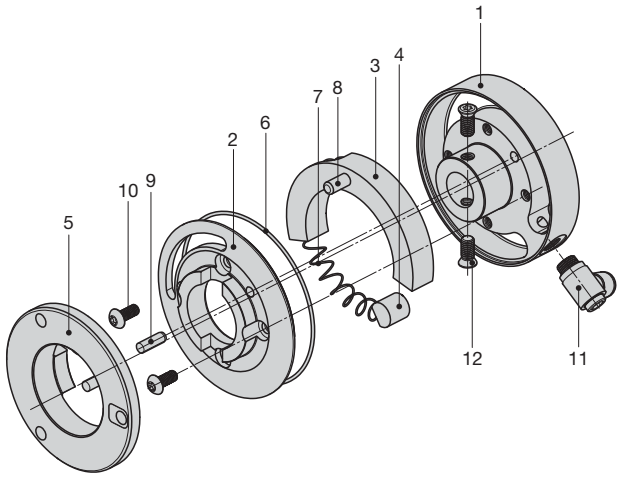

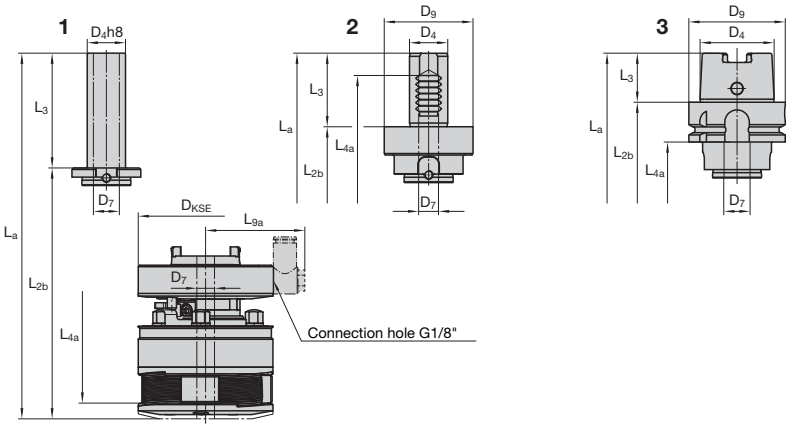

1 Straight shank

2 VDI shank

3 HSK shank

Others (upon request)

L_4	L_{4a}	L_6	L_9	L_{9a}	L_{10}	m-Rs
–	–	5 I 0.197 "	85,9 I 3.382 "	Individual	9,1 I 0.358 "	appr. 0,34 kg appr. 0.75 lb
–	–	5 I 0.197 "	85,9 I 3.382 "	Individual	9,1 I 0.358 "	appr. 0,37 kg appr. 0.82 lb
–	–	5 I 0.197 "	85,9 I 3.382 "	Individual	9,1 I 0.358 "	appr. 0,34 kg appr. 0.75 lb
–	–	5 I 0.197 "	85,9 I 3.382 "	Individual	9,1 I 0.358 "	appr. 0,37 kg appr. 0.82 lb
–	–	5 I 0.197 "	85,9 I 3.382 "	Individual	9,1 I 0.358 "	appr. 0,4 kg appr. 0.88 lb
102,9 I 4.051 "	142,4 I 5.606 "	5 I 0.197 "	85,9 I 3.382 "	Individual	9,1 I 0.358 "	appr. 0,7 kg appr. 1.54 lb
105,9 I 4.169 "	145,4 I 5.724 "	5 I 0.197 "	85,9 I 3.382 "	Individual	9,1 I 0.358 "	appr. 0,94 kg appr. 2.07 lb
154,9 I 6.098 "	194,4 I 7.654 "	5 I 0.197 "	85,9 I 3.382 "	Individual	9,1 I 0.358 "	appr. 1,42 kg appr. 3.13 lb
99,9 I 3.933"	139,4 I 5.488 "	5 I 0.197 "	85,9 I 3.382 "	Individual	9,1 I 0.358 "	appr. 1 kg appr. 2.21 lb

m-Rs = Weight shank

RH

LH

Nominal size x pitch mm	Lead 1k	Lead 2k
	Ident No.	
M 12 … 14 x 1,75	1514312	1514321
M 14 … 16 x 2	1514438	1514447
M 18 … 20 x 2,5	1514642	1514660
M 20 … 22 x 2,5	1514768	1514777

Nominal size x pitch mm	Lead 1k	Lead 2k
	Ident No.	
MF 12 … 14 x 1,5	1514269	1514278
MF 14 … 16 x 1,5	1514385	1514401
MF 18 … 20 x 2	1514606	1514615
MF 20 … 22 x 2	2168931	1514740

Nominal size x TPI	Lead 1k	Lead 2k
	Ident No.	
UNC 7/16 – 14	1515400	1515419
UNC 1/2 – 13	1515437	1515446
UNC 9/16 – 12	1515455	1515464
UNC 5/8 – 11	1515482	1515491
UNC 3/4 – 10	1515507	1515516
UNC 7/8 – 9	1515534	1515543

Nominal size x pitch mm | inch	RAA	RGE
	Ident No.	
Ø 12 … Ø 14 x 0,5 | Ø 0.472 … Ø 0.551 x 0.02	2243564	2243585
Ø 14 … Ø 16 x 0,5 | Ø 0.551 … Ø 0.63 x 0.02	2169627	2243586
Ø 16 … Ø 18 x 0,5 | Ø 0.63 … Ø 0.709 x 0.02	2243565	2243587
Ø 18 … Ø 20 x 0,5 | Ø 0.709 … Ø 0.787 x 0.02	2243566	2243588
Ø 20 … Ø 22 x 0,5 | Ø 0.787 … Ø 0.866 x 0.02	2243567	2243589
Ø 12 … Ø 14 x 0,6 | Ø 0.472 … Ø 0.551 x 0.024	2243568	2243590
Ø 14 … Ø 16 x 0,6 | Ø 0.551 … Ø 0.63 x 0.024	1515909	2243591
Ø 16 … Ø 18 x 0,6 | Ø 0.63 … Ø 0.709 x 0.024	2243569	2243592
Ø 18 … Ø 20 x 0,6 | Ø 0.709 … Ø 0.787 x 0.024	2243570	2243593
Ø 20 … Ø 22 x 0,6 | Ø 0.787 … Ø 0.866 x 0.024	2243571	2243594
Ø 12 … Ø 14 x 0,8 | Ø 0.472 … Ø 0.551 x 0.031	1515918	2168024
Ø 14 … Ø 16 x 0,8 | Ø 0.551 … Ø 0.63 x 0.031	2243572	2165370
Ø 16 … Ø 18 x 0,8 | Ø 0.63 … Ø 0.709 x 0.031	2168428	2243595
Ø 18 … Ø 20 x 0,8 | Ø 0.709 … Ø 0.787 x 0.031	1515936	2168023
Ø 20 … Ø 22 x 0,8 | Ø 0.787 … Ø 0.866 x 0.031	2243573	2243596
Ø 12 … Ø 14 x 1,0 | Ø 0.472 … Ø 0.551 x 0.039	1515972	1516114
Ø 14 … Ø 16 x 1,0 | Ø 0.551 … Ø 0.63 x 0.039	2165323	2243597
Ø 16 … Ø 18 x 1,0 | Ø 0.63 … Ø 0.709 x 0.039	1515990	1516123
Ø 18 … Ø 20 x 1,0 | Ø 0.709 … Ø 0.787 x 0.039	1516007	1516132
Ø 20 … Ø 22 x 1,0 | Ø 0.787 … Ø 0.866 x 0.039	1516016	2243598
Ø 12 … Ø 14 x 1,2 | Ø 0.472 … Ø 0.551 x 0.047	2241199	1516141
Ø 14 … Ø 16 x 1,2 | Ø 0.551 … Ø 0.63 x 0.047	1516025	1516150
Ø 16 … Ø 18 x 1,2 | Ø 0.63 … Ø 0.709 x 0.047	1516034	2243599
Ø 18 … Ø 20 x 1,2 | Ø 0.709 … Ø 0.787 x 0.047	1516043	1516169
Ø 20 … Ø 22 x 1,2 | Ø 0.787 … Ø 0.866 x 0.047	1516052	2168022
Ø 12 … Ø 14 x 1,5 | Ø 0.472 … Ø 0.551 x 0.059	1516070	1516187
Ø 14 … Ø 16 x 1,5 | Ø 0.551 … Ø 0.63 x 0.059	1516089	1516196
Ø 16 … Ø 18 x 1,5 | Ø 0.63 … Ø 0.709 x 0.059	2168315	1516203
Ø 18 … Ø 20 x 1,5 | Ø 0.709 … Ø 0.787 x 0.059	1516098	1516212
Ø 20 … Ø 22 x 1,5 | Ø 0.787 … Ø 0.866 x 0.059	2242855	1516221
Ø 12 … Ø 14 x 1,6 | Ø 0.472 … Ø 0.551 x 0.063	2243575	2243600
Ø 14 … Ø 16 x 1,6 | Ø 0.551 … Ø 0.63 x 0.063	2243576	2243601
Ø 16 … Ø 18 x 1,6 | Ø 0.63 … Ø 0.709 x 0.063	2243577	2243602
Ø 18 … Ø 20 x 1,6 | Ø 0.709 … Ø 0.787 x 0.063	2243578	2243603
Ø 20 … Ø 22 x 1,6 | Ø 0.787 … Ø 0.866 x 0.063	2243579	2243604
Ø 12 … Ø 14 x 2,0 | Ø 0.472 … Ø 0.551 x 0.079	2243580	2243605
Ø 14 … Ø 16 x 2,0 | Ø 0.551 … Ø 0.63 x 0.079	2243581	2242539
Ø 16 … Ø 18 x 2,0 | Ø 0.63 … Ø 0.709 x 0.079	2243582	2243606
Ø 18 … Ø 20 x 2,0 | Ø 0.709 … Ø 0.787 x 0.079	2243583	2243607
Ø 20 … Ø 22 x 2,0 | Ø 0.787 … Ø 0.866 x 0.079	2243584	2243608

Nominal size x TPI	Lead 1k	Lead 2k
	Ident No.	
UNF 7/16 … 1/2 – 20	1515570	1515589
UNF 9/16 … 5/8 – 18	1515605	1515614
UNF 3/4 – 16	1515650	1515669
UNF 7/8 – 14	1515678	2169974

Nominal size x TPI	Lead 1k	Lead 2k
	Ident No.	
G 1/4… 3/8 – 19	7180392	7180400
G 1/2 – 14	1515080	1515106

Nominal size x TPI	Lead 1k	Lead 2k
	Ident No.	
BSF 7/16 – 18	1514900	1514928
BSF 1/2…9/16 – 16	1514946	1514955
BSF 5/8…11/16 – 14	1514964	1514973
BSF 3/4 – 12	1514982	1514991
BSF 7/8…15/16[1)]– 11	2243559	1515008

Nominal size x TPI	Lead 1k	Lead 2k
	Ident No.	
BSW 7/16 – 14	1515124	1515142
BSW 1/2 … 9/16 – 12	1515151	1515160
BSW 5/8 … 11/16– 11	1515188	1515197
BSW 3/4 – 10	1515222	1515231
BSW 7/8… 15/16– 9	1515259	1515268

Nominal size x TPI	Lead 1k
	Ident No.
NPT 1/4 – 18	2241666

Nominal size x TPI	Lead 1k
	Ident No.
NPTF 1/4 – 18	2166887

1) For short threads up to 24 mm/0.945" including runout.

Nominal size mm | inch	Ident No.
Ø 12 – Ø 14 | Ø 0.472 – Ø 0.551	2241694
Ø 14 – Ø 16 | Ø 0.551 – Ø 0.63	1516249
Ø 16 – Ø 18 | Ø 0.63 – Ø 0.709	2165473
Ø 18 – Ø 20 | Ø 0.709 – Ø 0.787	1516258
Ø 20 – Ø 22 | Ø 0.787 – Ø 0.866	2169908

RD

Nominal size x TPI	Lead 1k	Lead 2k
	Ident No.	
Rd 18 – 20 x 1/8	2168222	2240161

Thread dimensions combined in one block can be rolled with **one** set of rolls.

Spare parts for axial type rolling head **F3 EVO**

Rolling head			F3 EVO	Rolling head			F3 EVO
Part No.	Qty.	Part description	Ident No.	Part No.	Qty.	Part description	Ident No.
1	1	Clutch	7146721	9-3	1	Threaded pin	7146733
2	1	Adjustment housing	7146722	9-4	1	Screw	2237766
3	1	Center plate	7146723	10	1	Coil spring	2165032
4	1	Front plate	7146724	11	1	Circlip	2165033
5	3	Eccentric spindle	2165028	12	1	Circlip DIN 471	7132606
6	3	Spacer stud	7146726	13	3	Carbide bushing	2165072
7	1	Center gear	7146727	14	3	Screw	7132607
8	3	Spur gear	7146728	15	3	Cover nut	2143583
9	1	Closing clip complete	7146730	16	3	Washer	2143366
9-1	1	Clip	7146731	17	1	Chip guard	7146725
9-2	1	Hand grip	7146732	18	3	Roll	individual

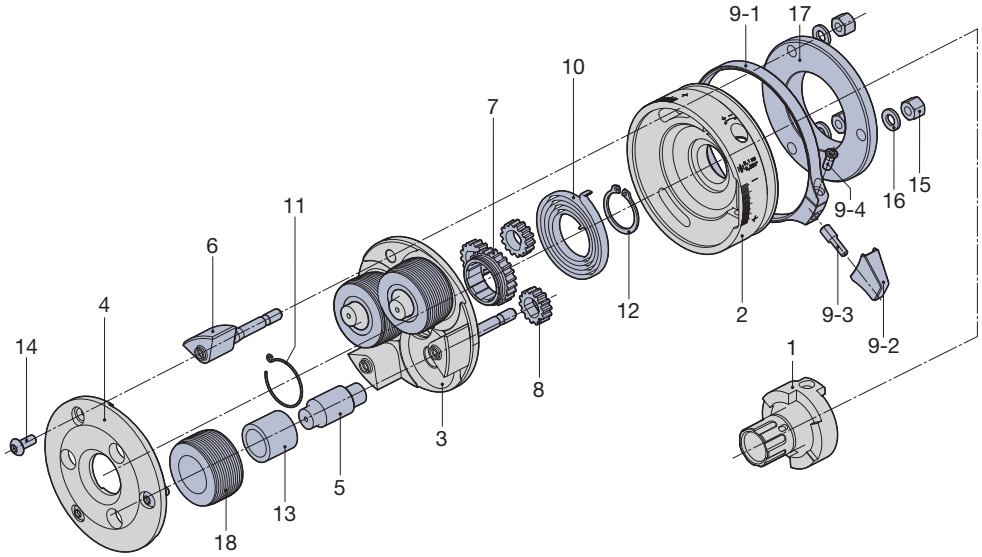

Axial type rolling head **F34 EVO, K34 EVO** NEW

Type	Ident No.
F34 EVO	7156344
F34L EVO	7169609
K34 EVO	7169610
K34L EVO	7169611

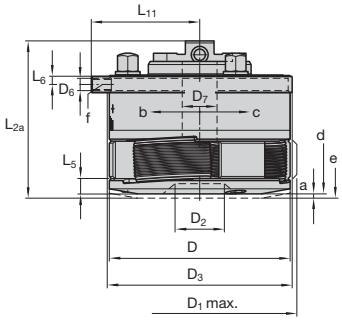

Dimension in mm / inches

D	D_{1max}	D_2	D_3	D_6	D_7	L_{2a}	L_5	L_6	L_{11}	a	α	γ		
117	128	44	119	M 8	22,5	97	8	5	66,8	4	60°	1° 15'		
4.606"	5.039"	1.732"	4.685"		0.886"	3.819"	0.315"	0.197"	2.630"	0.157"				

m-Rk	m-Ro
appr. 3,85 kg appr. 8.49 lb	0,32–0,85 kg 0.71–1.87 lb

F34 EVO, K34 EVO for right-hand threads
F34L EVO, K34L EVO for left-hand threads
F34 EVO, F34L EVO to be used stationary only
K34 EVO, K34L EVO used stationary or rotating

a = Pull off for opening
b = Head closes when type F
c = Head opens when type F
d = Rolling head closed
e = Rolling head opened
f = Thread for hand grip with stationary operation
α = Closing angle
γ = Inclined position of rolls
m-Rk = Rolling head weight without shank and rolls
m-Ro = Weight of 1 set of 3 rolls

Change shanks **EVOline**

Type	Ident No.
R25-size 3	7139628
R30-size 3	7139630
R1-size 3	7139632
R1 1/4-size 3	7139634
R1 1/2-size 3	7139636
VDI-25-size 3	7139638
VDI-30-size 3	7139640
VDI-40-size 3	7139642
HSK-A63-size 3	7139644

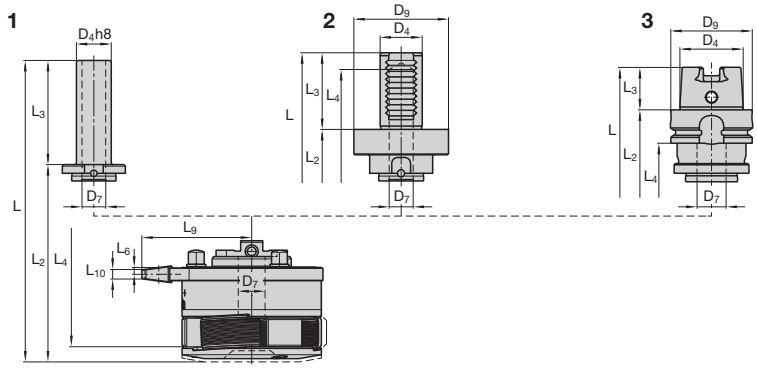

Shank Ø	Dimension in mm / inches								
	D_4	D_7	D_9	D_{KSE}	L	L_a	L_2	L_{2b}	L_3
25	25 I 0.984"	17 I 0.669"	–	113 I 4.449"	172 I 6.772"	211,5 I 8.327"	97 I 3.819"	136,5 I 5.374"	75 I 2.953"
30	30 I 1.181"	22,5 I 0.886"	–	113 I 4.449"	187 I 7.362"	226,5 I 8.917"	97 I 3.819"	136,5 I 5.374"	90 I 3.543"
1	25,4 I 1.000"	17 I 0.669"	–	113 I 4.449"	172 I 6.772"	211,5 I 8.327"	97 I 3.819"	136,5 I 5.374"	75 I 2.953"
1 1/4	31,75 I 1.250"	22,5 I 0.886"	–	113 I 4.449"	187 I 7.362"	226,5 I 8.917"	97 I 3.819"	136,5 I 5.374"	90 I 3.543"
1 1/2	38,1 I 1.500"	22,5 I 0.886"	–	113 I 4.449"	187 I 7.362"	226,5 I 8.917"	97 I 3.819"	136,5 I 5.378"	90 I 3.543"
VDI-25	25 I 0.984"	22,5 I 0.886"	58 I 2.283"	113 I 4.449"	168 I 6.614"	207,5 I 8.170"	120 I 4.724"	159,5 I 6.280"	48 I 1.890"
VDI-30	30 I 1.181"	22,5 I 0.886"	68 I 2.677"	113 I 4.449"	177,5 I 6.988"	217 I 8.543"	122,5 I 4.823"	162 I 6.378"	55 I 2.165"
VDI-40	40 I 1.575"	22,5 I 0.886"	83 I 3.268"	113 I 4.449"	185,5 I 7.303"	225 I 8.858"	122,5 I 4.823"	162 I 6.378"	63 I 2.480"
HSK-A63	48 I 1.890"	22,5 I 0.886"	63 I 2.480"	113 I 4.449"	171,5 I 6.752"	211 I 8.307"	139,5 I 5.492"	179 I 7.047"	32 I 1.260"

Change shanks will be delivered with the according fastening screws (2 x 7145916).

Coolant operating closing device			CCD Size 3 (F3/F34)
Part No.	Qty.	Part description	Ident No.
1	1	Housing	7137676
2	1	Cover plate	7137677
3	1	Curved piston	7137678
4	1	Spring bolt	7137679
5	1	Chip guard	7146737
6	1	Ring sealing	7137674
7	1	Pressure spring	7155154
8	1	Cylindrical pin	2142691
9	2	Cylindrical pin	2142688
10	4	Screw	7123891
11	1	L- and I-Fitting G1/8"	7167804-L 7167806-I
12	2	Screw	7145916

Type	Ident No.
CCD EVOline Size 3 (F3/F34)	7137675

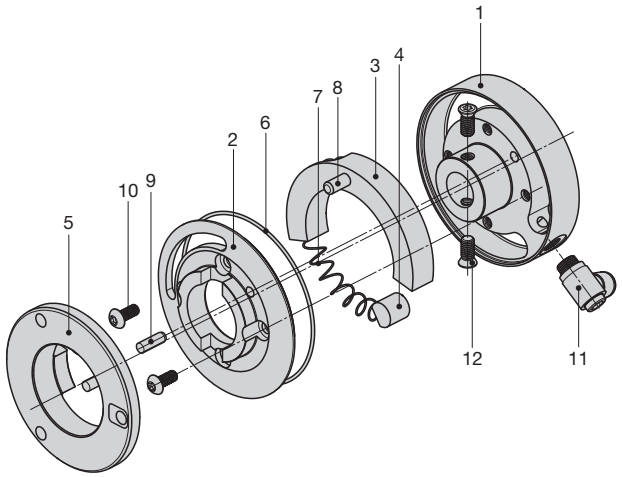

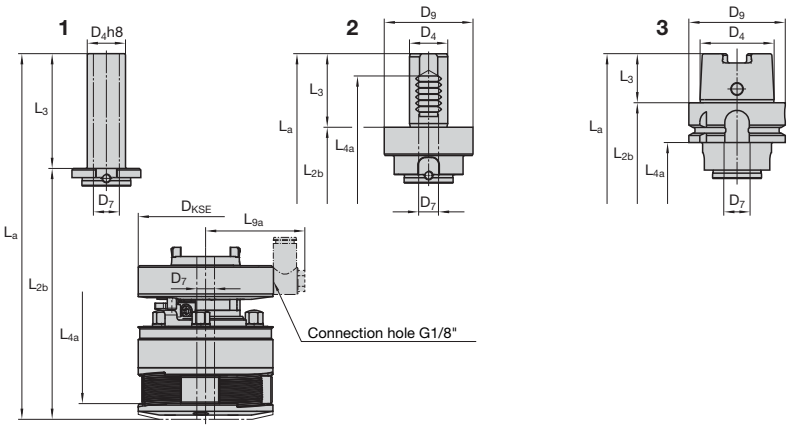

1 Straight shank

2 VDI shank

3 HSK shank

Others (upon request)

L_4	L_{4a}	L_6	L_9	L_{9a}	L_{10}	m-Rs
–	–	5 I 0.197 "	85,9 I 3.382 "	Individual	9,1 I 0.358 "	appr. 0,34 kg appr. 0.75 lb
–	–	5 I 0.197 "	85,9 I 3.382 "	Individual	9,1 I 0.358 "	appr. 0,37 kg appr. 0.82 lb
–	–	5 I 0.197 "	85,9 I 3.382 "	Individual	9,1 I 0.358 "	appr. 0,34 kg appr. 0.75 lb
–	–	5 I 0.197 "	85,9 I 3.382 "	Individual	9,1 I 0.358 "	appr. 0,37 kg appr. 0.82 lb
–	–	5 I 0.197 "	85,9 I 3.382 "	Individual	9,1 I 0.358 "	appr. 0,4 kg appr. 0.88 lb
104,5 I 4.114 "	144 I 5.669 "	5 I 0.197 "	85,9 I 3.382 "	Individual	9,1 I 0.358 "	appr. 0,7 kg appr. 1.54 lb
107,5 I 4.232 "	147 I 5.787 "	5 I 0.197 "	85,9 I 3.382 "	Individual	9,1 I 0.358 "	appr. 0,94 kg appr. 2.07 lb
156,5 I 6.161 "	196 I 7.717 "	5 I 0.197 "	85,9 I 3.382 "	Individual	9,1 I 0.358 "	appr. 1,42 kg appr. 3.13 lb
101,5 I 3.996 "	141 I 5.551 "	5 I 0.197 "	85,9 I 3.382 "	Individual	9,1 I 0.358 "	appr. 1 kg appr. 2.21 lb

m-Rs = Weight shank

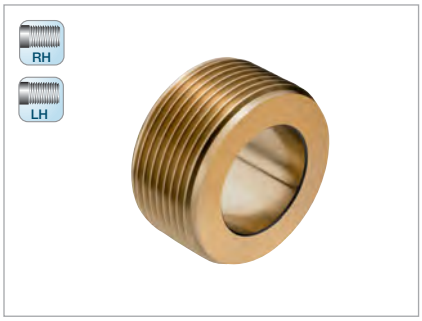

MF

Nominal size x pitch mm | inch	Lead 1k	Lead 2k
	Ident No.	
MF 12 ... 14 x 1	1516800	1516819
MF 14 ... 16 x 1	1516828	1516837
MF 16 ... 18 x 1	1516846	1516855
MF 18 ... 20 x 1	1516864	1516882
MF 16 ... 18 x 1,5	1517006	1517015
MF 18 ... 20 x 1,5	1517042	1517060
MF 20 ... 22 x 1,5	1517088	1517113
MF 22 ... 24[1] x 1,5	1517159	1517177
MF 24[1] ... 27[1] x 1,5	1517195	1517202
MF 27[1] ... 30[1] x 1,5	1517220	1517248

UN UNF UNEF

Nominal size x TPI	Lead 1k	Lead 2k
	Ident No.	
UNEF 1/2 –28	2243650	2243655
UN 5/8 ... 11/16 –28	2165494	2246320
UN 11/16 ... 3/4 –28	2246314	2246321
UN 3/4 ... 13/16 –28	2246315	2246322
UN 13/16 ... 7/8 –28	2246318	2246324
UNEF 9/16 ... 5/8 –24	2243651	2243656
UNEF 5/8 ... 11/16 –24	2240319	2243657
UN 5/8 ... 11/16 –20	2246313	2246319
UNEF 3/4 ... 13/16 –20	2243652	2243658
UNEF 13/16 ... 7/8 –20	2166331	2166820
UNEF 7/8 ... 15/16[1] –20	2243653	2243659
UNEF 15/16[1] ... 1[1] –20	2168615	2243660
UNF 5/8 –18	1517505	1517514
UNEF 11/16[1] ... 1 1/8 –18	2243654	2243661
UNF 11/16 ... 3/4 –16	2169256	2241532
UNF 3/4 ... 13/16 –16	1517523	1517541
UN 7/8 ... 15/16[1] –16	2246317	2241474
UNF 7/8 –14	1517550	1517569
UN 7/8 ... 15/16[1] –12	2246316	2246323
UNF 1[1] –12	1517578	1517587

BSFS

Nominal size x TPI	Lead 1k	Lead 2k
	Ident No.	
BSFS 9/16 ... 5/8 –26	2243620	2243634
BSFS 5/8 ... 11/16 –26	2243621	2243635
BSFS 11/16 ... 3/4 –26	2243622	2243636
BSFS 3/4 ... 13/16 –26	2243623	2243637
BSFS 9/16 ... 5/8 –20	2243624	2243638
BSFS 5/8 ... 11/16 –20	2243625	2243639
BSFS 11/16 ... 3/4 –20	2243626	2243640
BSFS 3/4 ... 13/16 –20	2243627	2243641
BSFS 13/16 ... 7/8[1] –20	2243629	2243642
BSFS 7/8[1] ... 15/16[1] –20	2243630	2243643
BSFS 15/16[1] ... 1[1] –20	2240197	2243644
BSFS 11/16 ... 3/4 –16	2241703	2243645
BSFS 3/4 ... 13/16 –16	2243631	2243646
BSFS 1 1/8[1] –12	2243632	2243647
BSFS 1 1/16[1] –10	2243633	2243648

G

Nominal size x TPI	Lead 1k	Lead 2k
	Ident No.	
G 3/8 – 19	1517408	1517417
G 1/2 ... 5/8[1] – 14	1517435	1517444
G 3/4[1] – 14	1517462	1517471
G 7/8[1] – 14	2168006	2243649

NPT

Nominal size x TPI	Lead 1k
	Ident No.
NPT 3/4 – 14	1517756
NPT 1/2 – 14	1517738
NPT 3/8 – 18	1517710

NPTF

Nominal size x TPI	Lead 1k
	Ident No.
NPTF 3/4 – 14	1517774
NPTF 1/2 – 14	1517765
NPTF 3/8 – 18	2165391

Thread dimensions combined in one block can be rolled with **one** set of rolls.

1) For short threads up to 24 mm/0.945" including runout.

Rolling head			F34 EVO	Rolling head			F34 EVO
Part No.	Qty.	Part description	Ident No.	Part No.	Qty.	Part description	Ident No.
1	1	Clutch	7146721	9-4	1	Screw	2237766
2	1	Adjustment housing	7146722	10	1	Coil spring	2165032
3	1	Center plate	7156357	11	1	Circlip	2165033
4	1	Front plate	7156358	12	1	Circlip DIN 471	7132606
5	3	Eccentric spindle	2165534	13	3	Carbide bushing	2164887
6	3	Spacer stud	7156359	14	3	Screw	7132607
7	1	Center gear	7156361	15	3	Cover nut	2143583
8	3	Spur gear	7156362	16	3	Washer	2143366
9	1	Closing clip complete	7146730	17	1	Chip guard	7146725
9-1	1	Clip	7146731	18	3	Roll	individual
9-2	1	Hand grip	7146732	19	3	Washer	2165539
9-3	1	Threaded pin	7146733				

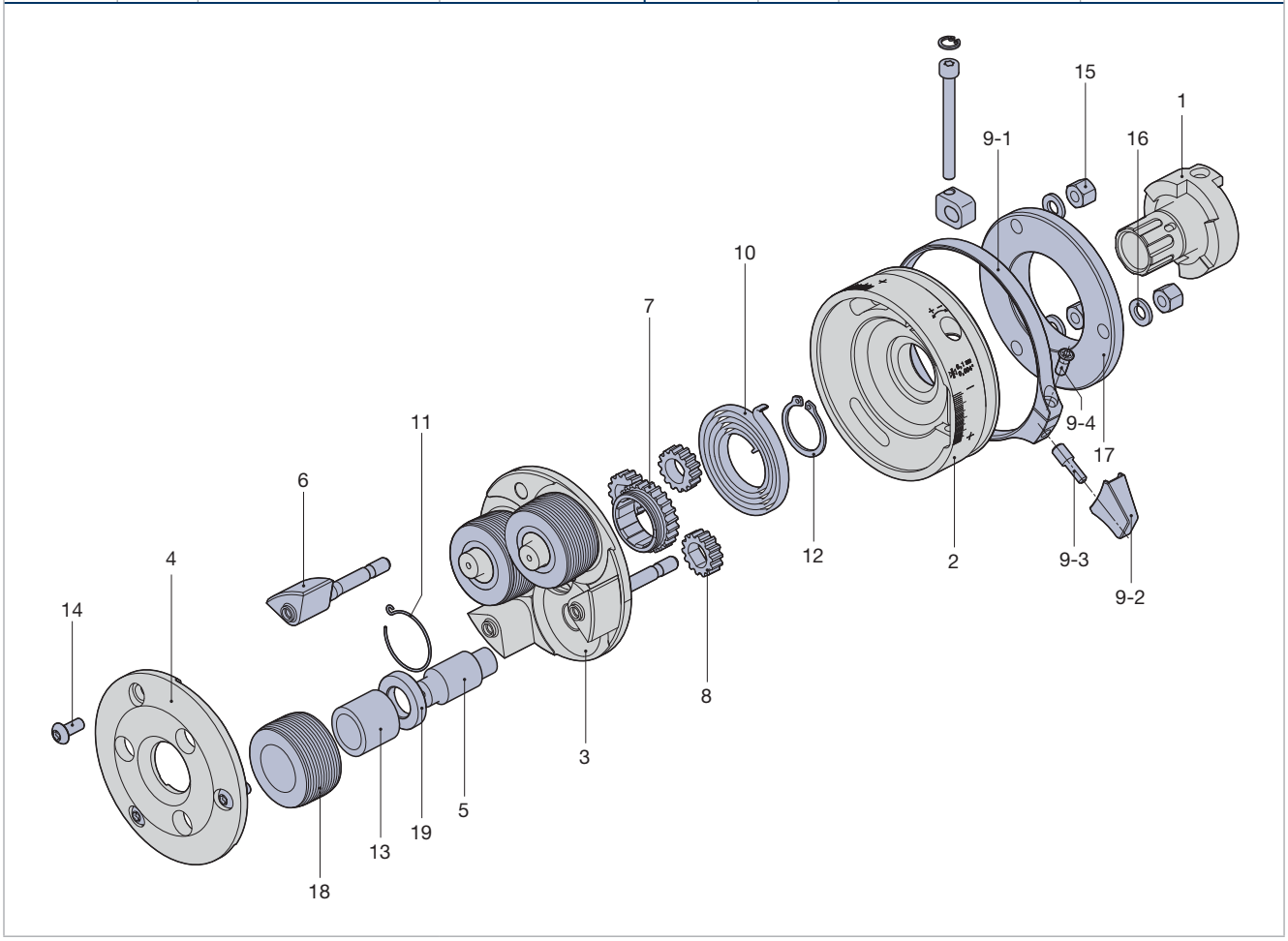

Axial Rolling Head EVOline with closing device

Automated Closing with coolant-operated closing device	Mechanical Closing with closing clip
Rolling process, head opens automatically	Rolling process, head opens automatically
↓	↓
Rolling head to be returned to initial position	Rolling head to be returned to initial position
↓	↓
Operating the closing device by M-Function through machine control	Positioning towards closing mechanism
↓	↓
Rolling head is closed	Moving the head (in rapid traverse rate resp. feed rate) to closing mechanism
↓	↓
Moving the head to original position	Rolling head will be closed
↓	↓
Saving **Process time > appr. 7–15 sec. per workpiece (depending on process design)**	Moving the head to original position

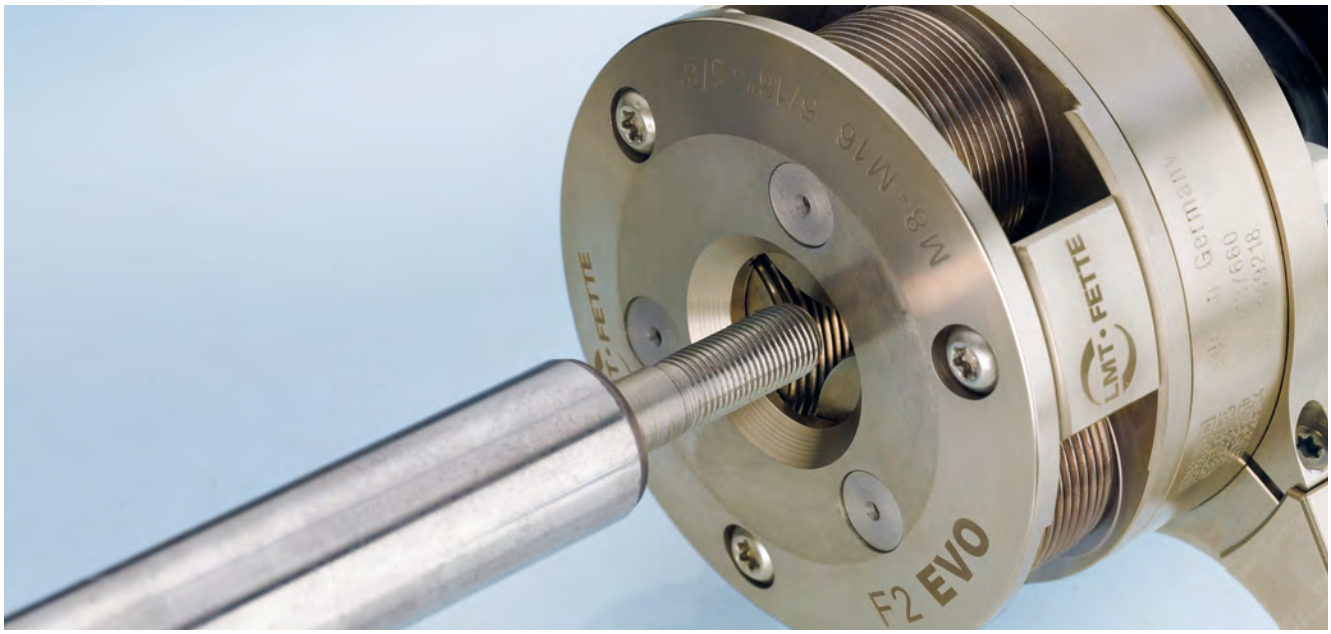

LMT • FETTE

We are committed to you worldwide!